AUTOMATED MAKEUP KIT ASSEMBLER

EEM 343 GROUP 1

Group members



MOHAMMAD QAYYUM BIN VARISAI MOHAMMED



MUKHLISH BIN MAHMAD



LIM RUI YANG



MUHAMMAD AFFAN NUR IMAN BIN AZMAN

Problems Statement

- Human physical assembly is still widely used in manufacturing and assembly of makeup kit which is time consuming.
- Production quantity low
- Usage of heavy automation which is expensive and consists of complex structure
- Small business which cannot afford pricey automation and wish to self produce kit

Objectives

- Simple structural robot mechanism with optimized capability
- Stability and flexibility at a wide range of height
- moves with pinpoint accuracy and agile
- User friendly and can be controlled by autonomous and manual options

Motivation

-As a group that is passionate about robotics and its demand in its application in the industrial sector especially in the automation as it reduces human error greatly with enhanced efficiency and accuracy . Apart from that, it reduces work stress and is able to harness human specialty in other important areas where machine application is not applied. I intended to follow this trend by developing a robot with the desired capability to fulfill personal benchmarks as well as industrial benchmarks.

The solution

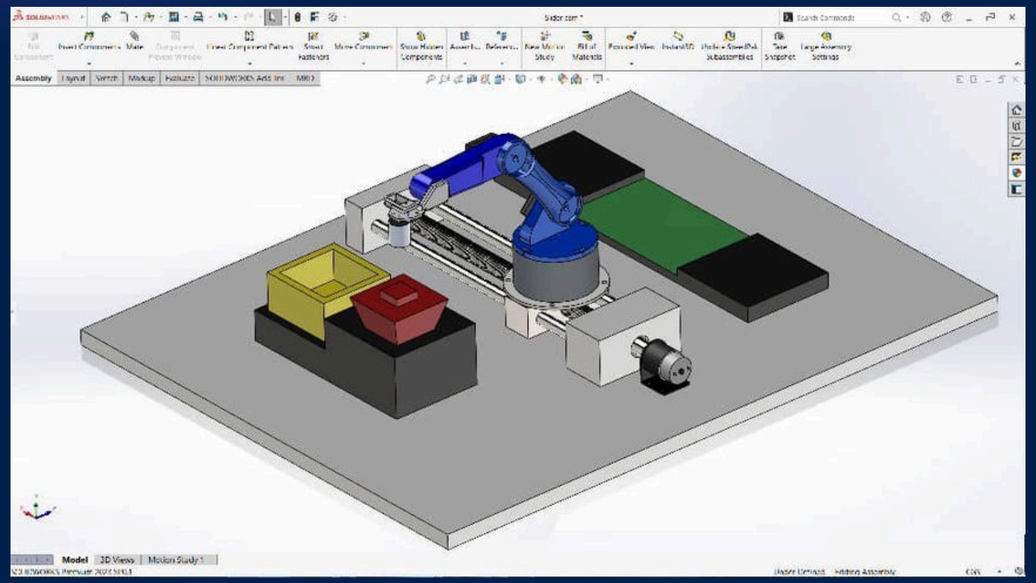

-This is the proposed robot which is derived

which is mainly for industrial architecture due to its pinpoint fast, accuracy, and endurance

which is made for the specialized function to last long and strength of joints which are able to widthstand a substantial amount of load

Components

Software:

Solidworks
MATLAB
LabVIEW

HARDWARE IMPLEMENTATION

LabVIEW MYRIO BOARD
Voltage regulator
DC Motor and Driver
iR Sensor
Servo Motor



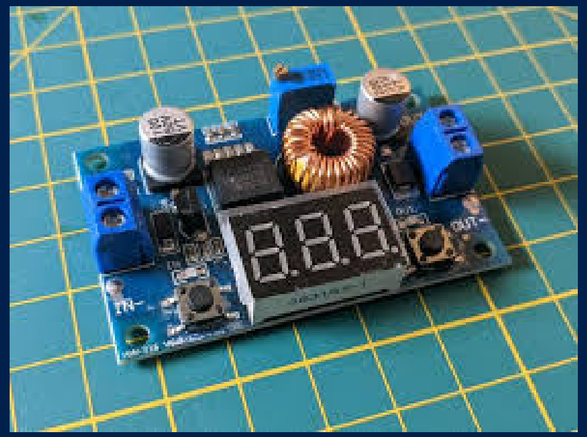







FLOWCHART

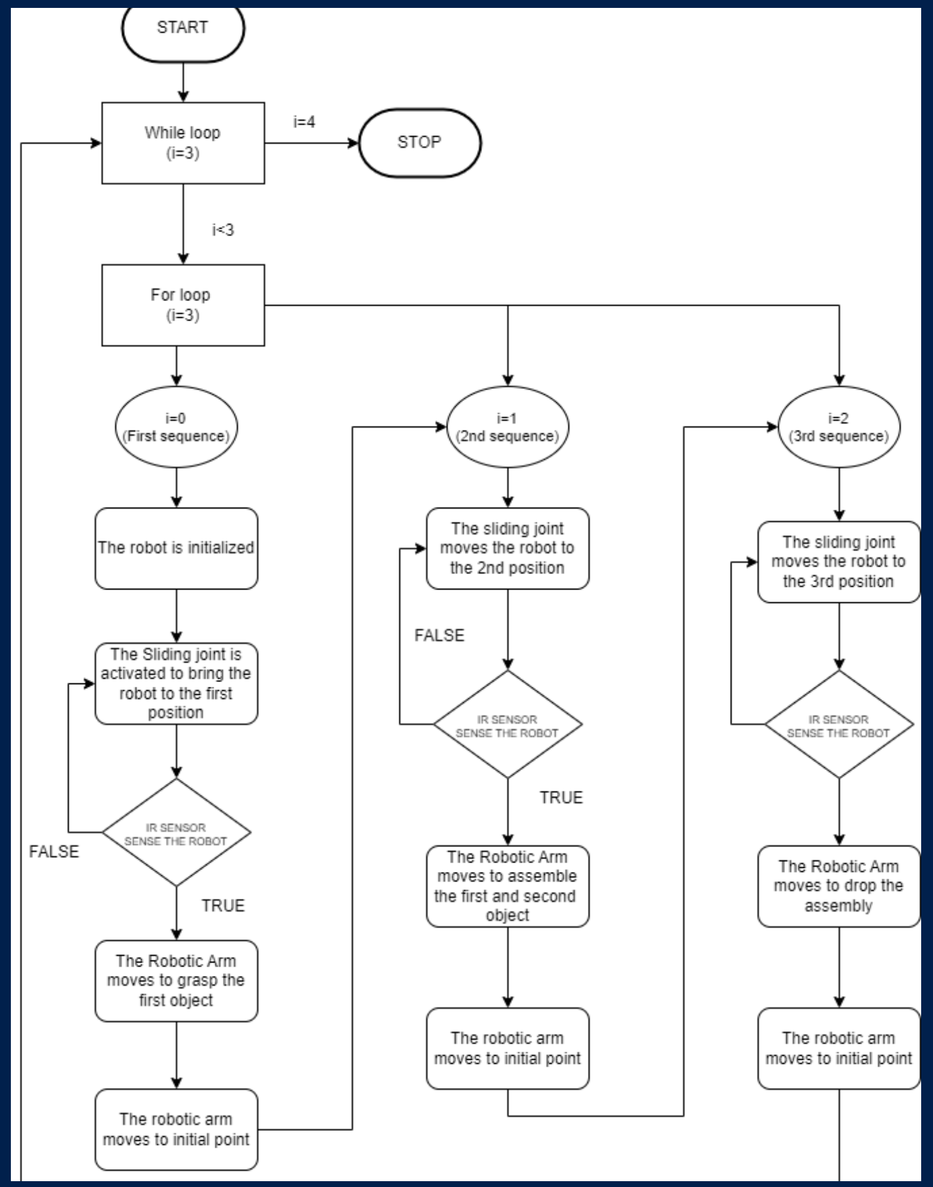
START
While loop
(i=3)
i=4
STOP
i<3
For loop
(i=3)
i=0
(First sequence)
The robot is initialized
The Sliding joint is activated to bring the robot to the first position
IR SENSOR SENSE THE ROBOT
FALSE
TRUE
The Robotic Arm moves to grasp the first object
The robotic arm moves to initial point
i=1
(2nd sequence)
The sliding joint moves the robot to the 2nd position
FALSE
IR SENSOR SENSE THE ROBOT
TRUE
The Robotic Arm moves to assemble the first and second object
The robotic arm moves to initial point
i=2
(3rd sequence)
The sliding joint moves the robot to the 3rd position
IR SENSOR SENSE THE ROBOT
The Robotic Arm moves to drop the assembly
The robotic arm moves to initial point

BLOCK DIAGRAM

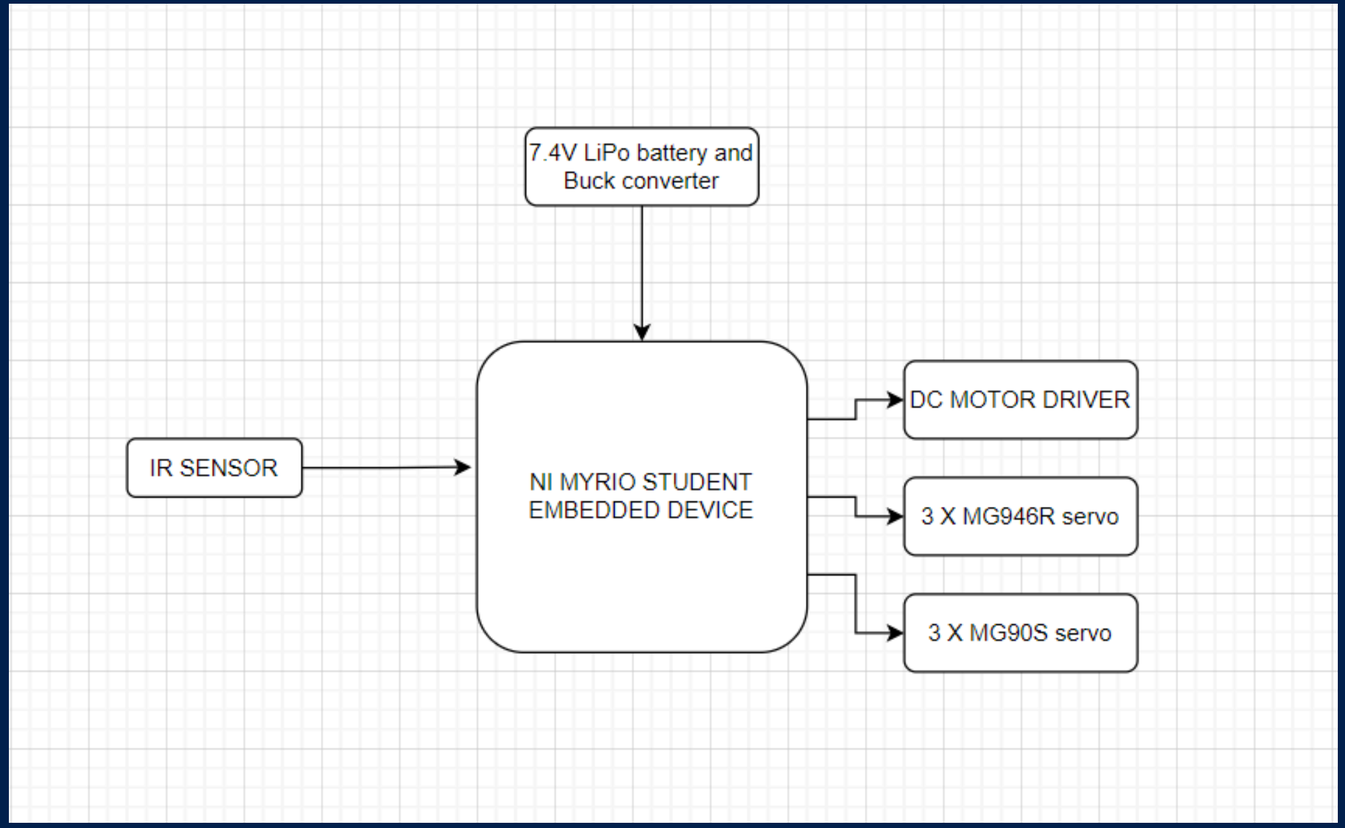

KINEMATIC EQUATION ANALYSIS

Frame Assignment

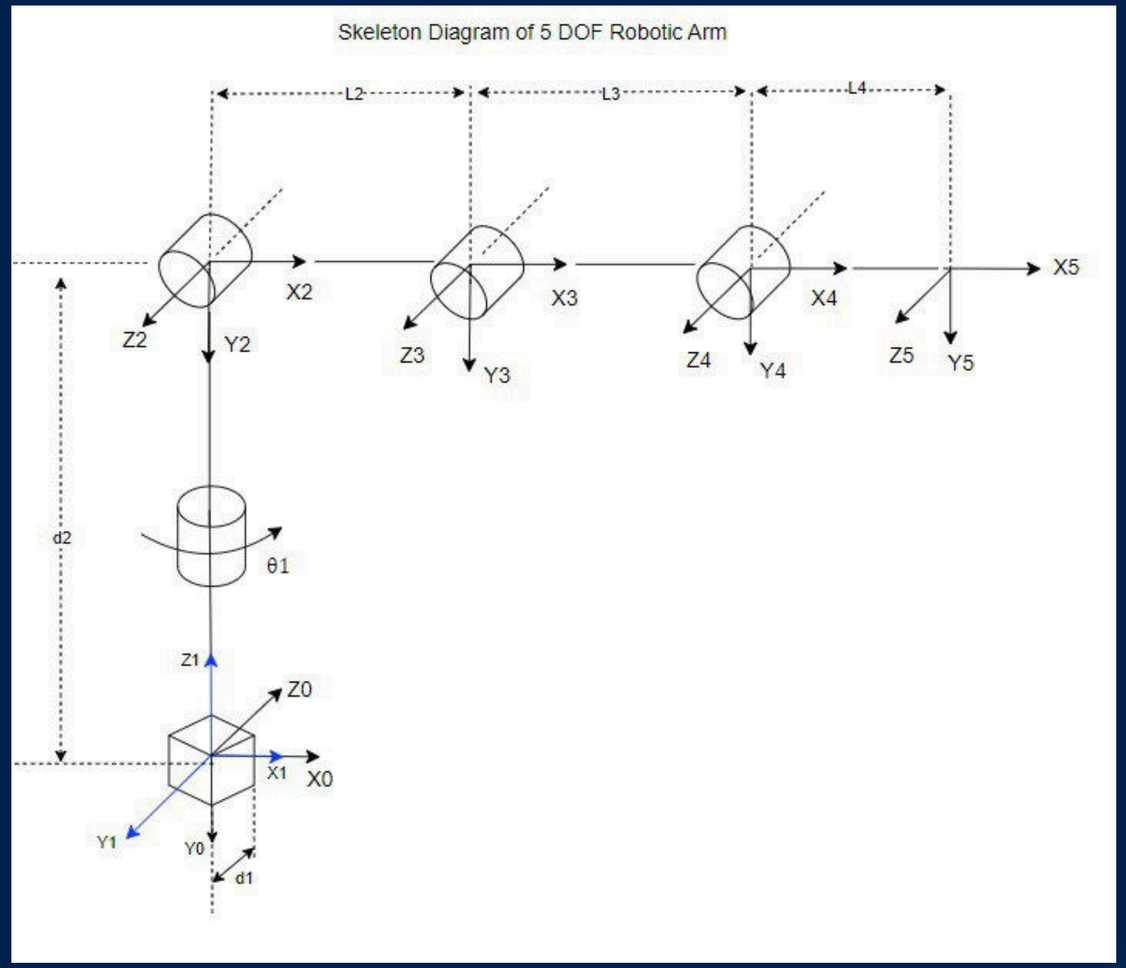

KINEMATIC EQUATION ANALYSIS

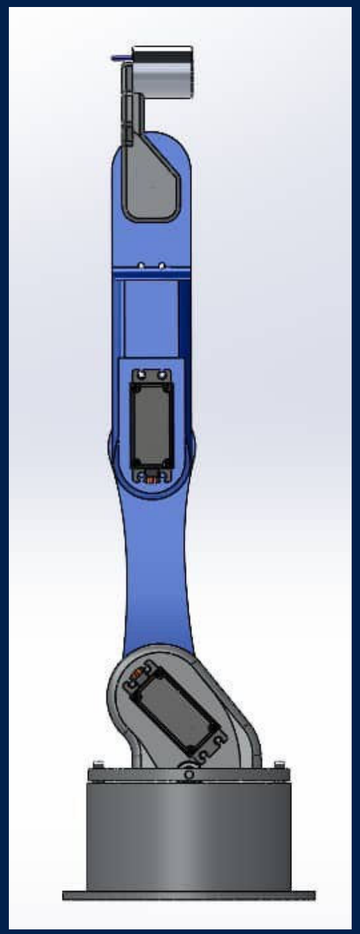

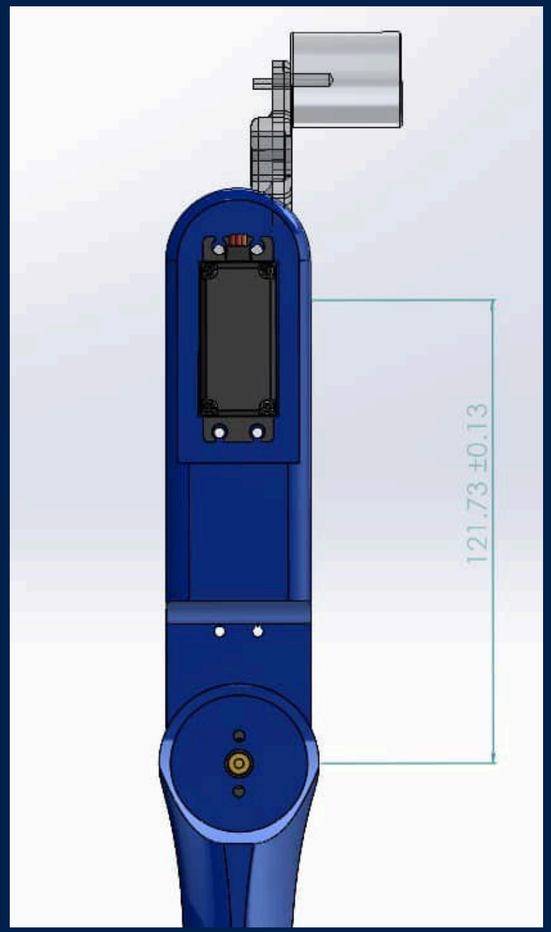

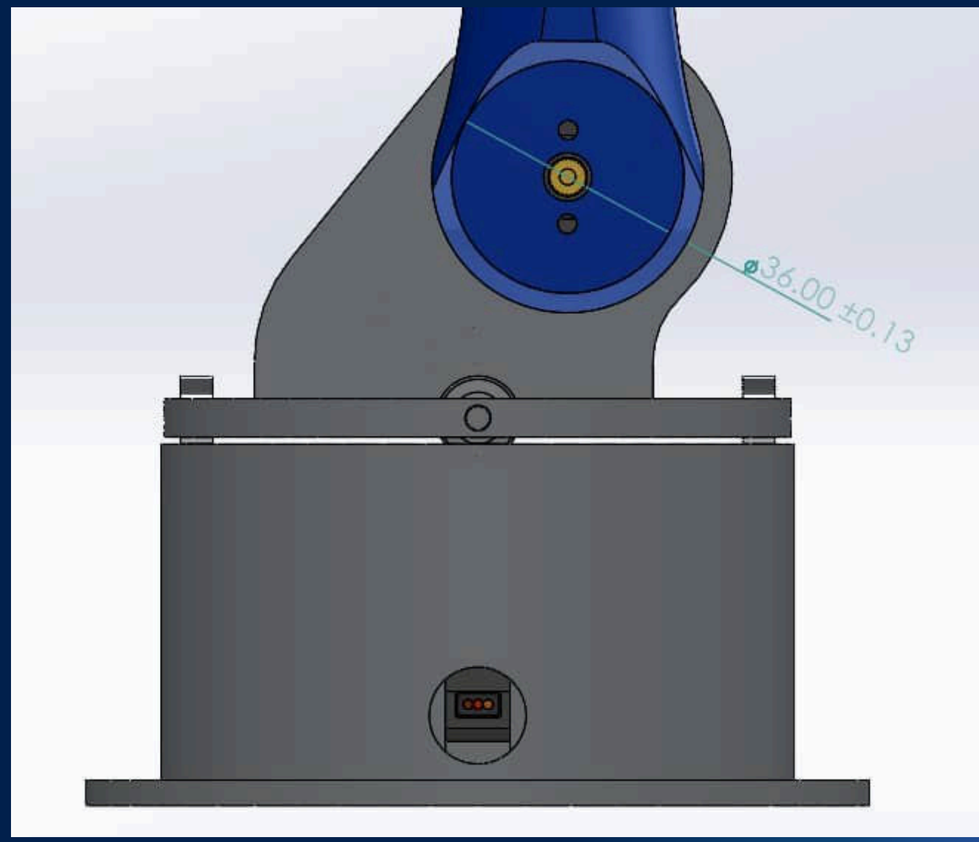

KINEMATIC EQUATION ANALYSIS

DH–Parameters

Link, i	θ_i	a_i $(^\circ)$	d_i *(mm)*	α_i *(mm)*
1	0	90	d_1	0
2	θ_1	90	d_2	0
3	θ_2	0	0	l_1
4	θ_3	0	0	l_2
5	θ_4	0	0	l_3

Lengths:

$d_1 = 160mm,$
$d_2 = 100.23mm,$
$l_1 = 120.59mm,$
$l_2 = 121.7mm,$
$l_3 = 60.4mm$

The lengths for each link were generated using solidworks

KINEMATIC EQUATION ANALYSIS

FORWARD KINEMATIC

$$A = \begin{bmatrix} \cos\theta & -cos\alpha i.\, sin\theta i & sin\alpha.\, sin\theta i & \alpha i.\, cos\theta i \\ sin\theta i & cos\alpha i.\, sin\theta i & -sin\alpha.\, cos\theta i & \alpha i.\, sin\theta i \\ 0 & sindi & cos\alpha & di \\ 0 & 0 & 0 & 1 \end{bmatrix}$$

GENERAL EQUATION

KINEMATIC EQUATION ANALYSIS

FORWARD KINEMATIC

$$ {}^{R}_{0}T = \begin{bmatrix} 1 & 0 & 0 & 0 \\ 0 & 1 & 0 & 0 \\ 0 & 0 & 1 & d_1 \\ 0 & 0 & 0 & 1 \end{bmatrix} $$

$$ A_1 = {}^{0}_{1}T = \begin{bmatrix} 1 & 0 & 0 & 0 \\ 0 & 0 & -1 & 0 \\ 0 & 1 & 0 & d_1 \\ 0 & 0 & 0 & 1 \end{bmatrix} $$

$$ A_2 = {}^{1}_{2}T = \begin{bmatrix} \cos\theta_1 & 0 & \sin\theta_1 & 0 \\ \sin\theta_1 & 0 & -\cos\theta_1 & 0 \\ 0 & 1 & 0 & d_2 \\ 0 & 0 & 0 & 1 \end{bmatrix} $$

$$ A_3 = {}^{2}_{3}T = \begin{bmatrix} \cos\theta_2 & -\sin\theta_2 & 0 & l_1 cos\theta_2 \\ \sin\theta_2 & \cos\theta_2 & 0 & l_1 sin\theta_2 \\ 0 & 0 & 1 & 0 \\ 0 & 0 & 0 & 1 \end{bmatrix} $$

$$ A_4 = {}^{3}_{4}T = \begin{bmatrix} \cos\theta_3 & -\sin\theta_3 & 0 & l_2 cos\theta_3 \\ \sin\theta_3 & \cos\theta_3 & 0 & l_2 sin\theta_3 \\ 0 & 0 & 1 & 0 \\ 0 & 0 & 0 & 1 \end{bmatrix} $$

$$ A_5 = {}^{4}_{5}T = \begin{bmatrix} \cos\theta_4 & -\sin\theta_4 & 0 & l_3 cos\theta_4 \\ \sin\theta_4 & \cos\theta_4 & 0 & l_3 sin\theta_4 \\ 0 & 0 & 1 & 0 \\ 0 & 0 & 0 & 1 \end{bmatrix} $$

KINEMATIC EQUATION ANALYSIS

FORWARD KINEMATIC

$$0T5 = A0 * A1 * A2 * A3 * A4 * A5$$

$$^{0}_{5}T = {}^{0}_{1}T\ {}^{1}_{2}T\ {}^{2}_{3}T\ {}^{3}_{4}T\ {}^{4}_{5}T$$

$$^{0}_{5}T = \begin{bmatrix} 1 & 0 & 0 & 0 \\ 0 & 0 & -1 & 0 \\ 0 & 1 & 0 & d_1 \\ 0 & 0 & 0 & 1 \end{bmatrix} \begin{bmatrix} \cos\theta_1 & 0 & \sin\theta_1 & 0 \\ \sin\theta_1 & 0 & -\cos\theta_1 & 0 \\ 0 & 1 & 0 & d_2 \\ 0 & 0 & 0 & 1 \end{bmatrix}$$

$$\begin{bmatrix} \cos\theta_2 & -\sin\theta_2 & 0 & l_1 cos\theta_2 \\ \sin\theta_2 & \cos\theta_2 & 0 & l_1 sin\theta_2 \\ 0 & 0 & 1 & 0 \\ 0 & 0 & 0 & 1 \end{bmatrix} \begin{bmatrix} \cos\theta_3 & -\sin\theta_3 & 0 & l_2 cos\theta_3 \\ \sin\theta_3 & \cos\theta_3 & 0 & l_2 sin\theta_3 \\ 0 & 0 & 1 & 0 \\ 0 & 0 & 0 & 1 \end{bmatrix}$$

$$\begin{bmatrix} \cos\theta_4 & -\sin\theta_4 & 0 & l_3 cos\theta_4 \\ \sin\theta_4 & \cos\theta_4 & 0 & l_3 sin\theta_4 \\ 0 & 0 & 1 & 0 \\ 0 & 0 & 0 & 1 \end{bmatrix}$$

$$^{0}_{5}T = \begin{bmatrix} \cos\theta_1\,[\cos[\theta_2+\theta_3+\theta_4]] & -cos\theta_1[\sin[\theta_2+\theta_3+\theta_4]] \\ -sin\theta_1[\theta_2+\theta_3+\theta_4] & -\cos[\theta_2+\theta_3+\theta_4] \\ 0 & 0 \\ 0 & 0 \end{bmatrix}$$

$$\begin{bmatrix} sin\theta_1 & cos\theta_1[l_3\cos(\theta_2+\theta_3+\theta_4)+l_2\cos(\theta_2+\theta_3)+l_1\cos(\theta_2)] \\ 0 & -l_3\sin(\theta_2+\theta_3+\theta_4)-l_2\sin(\theta_2+\theta_3)-l_1 sin\theta_1-d_2 \\ -cos\theta_1 & sin\theta_1[l_3\cos(\theta_2+\theta_3+\theta_4)+l_2\cos(\theta_2+\theta_3)+l_1 cos\theta_2]+d_1 \\ 0 & 0 \end{bmatrix}$$

JACOBIAN ANALYSIS

FORMULA

Jacobian,

$$J = \begin{pmatrix} \frac{\partial x}{\partial \theta_1} & \frac{\partial x}{\partial \theta_2} & \frac{\partial x}{\partial \theta_3} & \frac{\partial x}{\partial \theta_4} \\ \frac{\partial y}{\partial \theta_1} & \frac{\partial y}{\partial \theta_2} & \frac{\partial y}{\partial \theta_3} & \frac{\partial y}{\partial \theta_4} \\ \frac{\partial z}{\partial \theta_1} & \frac{\partial z}{\partial \theta_2} & \frac{\partial z}{\partial \theta_3} & \frac{\partial z}{\partial \theta_4} \end{pmatrix}$$

Thus, differential motion of the robotic arm is

$$\begin{pmatrix} dx \\ dy \\ dz \end{pmatrix} = (J) \begin{pmatrix} d\theta_1 \\ d\theta_2 \\ d\theta_3 \\ d\theta_4 \end{pmatrix}$$

From the kinematic equation, we obtain the translation position of the manipulator and differentiate each row relative to the angle.

JACOBIAN ANALYSIS

METHOD

$$\begin{bmatrix} cos\theta_1[l3\cos(\theta_2+\theta_3+\theta_4)+l2\cos(\theta_2+\theta_3)+l1cos\theta_2] \\ -l3\sin(\theta_2+\theta_3+\theta_{4)}-l2\sin(\theta_2+\theta_3)-l1sin\theta_1-d2 \\ sin\theta_1[l3\cos(\theta_2+\theta_3+\theta_4)+l2\cos(\theta_2+\theta_3)+l1cos\theta_2]+d1 \end{bmatrix}$$

$$=\begin{bmatrix} lx \\ ly \\ lz \end{bmatrix}={}^0\mathrm{P}_5$$

$$\mathrm{D}=\begin{bmatrix} R_5^0\begin{bmatrix}0\\0\\1\end{bmatrix} & \frac{\mathrm{d}0p5}{d\theta_1} & \frac{\mathrm{d}0p5}{d\theta_2} & \frac{\mathrm{d}0p5}{d\theta_3} & \frac{\mathrm{d}0p5}{d\theta_4} \end{bmatrix}\begin{bmatrix}\theta_1\\\theta_2\\\theta_3\\\theta_4\end{bmatrix}$$

$$J=\begin{bmatrix} 0 & \frac{\mathrm{d}p_x}{d\theta_1} & \frac{\mathrm{d}p_x}{d\theta_2} & \frac{\mathrm{d}p_x}{d\theta_3} & \frac{dp_x}{d\theta_3} \\ -1 & \frac{\mathrm{d}y}{d\theta_1} & \frac{dy}{d\theta_2} & \frac{dy}{d\theta_3} & \frac{dy}{d\theta_4} \\ 0 & \frac{\mathrm{d}z}{d\theta_1} & \frac{dz}{d\theta_2} & \frac{dz}{d\theta_3} & \frac{dz}{d\theta_4} \end{bmatrix}$$

$$D=\begin{bmatrix} 0 & \frac{\mathrm{d}p_x}{d\theta_1} & \frac{\mathrm{d}p_x}{d\theta_2} & \frac{\mathrm{d}p_x}{d\theta_3} & \frac{dp_x}{d\theta_3} \\ -1 & \frac{\mathrm{d}y}{d\theta_1} & \frac{dy}{d\theta_2} & \frac{dy}{d\theta_3} & \frac{dy}{d\theta_4} \\ 0 & \frac{\mathrm{d}z}{d\theta_1} & \frac{dz}{d\theta_2} & \frac{dz}{d\theta_3} & \frac{dz}{d\theta_4} \end{bmatrix}$$

JACOBIAN ANALYSIS

CALCULATION

$$\frac{dx}{d\theta_1} = -\sin\theta_1 [\, l_3 \cos(\theta_2+\theta_3+\theta_4) + l_2 \cos(\theta_2+\theta_3) + l_1 \cos(\theta_2) \,]$$

$$\frac{dy}{d\theta_1} = -l_1 \cos(\theta_1)$$

$$\frac{dz}{d\theta_1} = \cos\theta_1 [\, l_3 \cos(\theta_2+\theta_3+\theta_4) + l_2 \cos(\theta_2+\theta_3) + l_1 \cos(\theta_2) \,] + d1$$

$$\frac{dx}{d\theta_2} = -\cos\theta_1 [\, l_3 \sin(\theta_2+\theta_3+\theta_4) + l_2 \sin(\theta_2+\theta_3) + l_1 \sin(\theta_2) \,]$$

$$\frac{dy}{d\theta_2} = -l_3 \cos(\theta_2+\theta_3+\theta_4) - l_2 \cos(\theta_2+\theta_3)$$

$$\frac{dt}{d\theta_2} = -\sin\theta_1 [\, l_3 \sin(\theta_2+\theta_3+\theta_4) + l_2 \sin(\theta_2+\theta_3) + l_1 \cos(\theta_2) \,]$$

$$\frac{dx}{d\theta_3} = -\cos\theta_1 [\, l_3 \sin(\theta_2+\theta_3+\theta_4) + l_2 \sin(\theta_2+\theta_3) \,]$$

$$\frac{dy}{d\theta_3} = -l_3 \cos(\theta_2+\theta_3+\theta_4) - l_2 \sin(\theta_2+\theta_3)$$

$$\frac{dz}{d\theta_3} = -\sin\theta_1 [\, l_3 \sin(\theta_2+\theta_3+\theta_4) + l_2 \cos(\theta_2+\theta_3) \,]$$

$$\frac{dx}{d\theta_3} = -\cos\theta_1 [\, l_3 \sin(\theta_2+\theta_3+\theta_4) \,]$$

$$\frac{dy}{d\theta_3} = -l_3 \cos(\theta_2+\theta_3+\theta_4)$$

$$\frac{dz}{d\theta_3} = -\cos\theta_1 [\, l_3 \sin(\theta_2+\theta_3+\theta_4) \,]$$

Table 2: Jacobian of robotic arm

	dx	dy	dz
θ_1	$-S_1[L_3C_{23} + L_2C_2 + L_4C_{234} - 90]$	$-C_1[L_3C_{23} + L_2C_2 + L_4C_{234} - 90]$	0
θ_2	$-C_1[L_3C_{23} + L_2C_2 + L_4C_{234}]$	$-S_1[L_3C_{23} + L_2C_2 + L_4C_{234}]$	$L_3C_{23} + L_2C_2 + L_4C_{234}$
θ_3	$-C_1[L_3C_{23} + L_4C_{234}]$	$-S_1[L_3C_{23} + L_4C_{234}]$	$L_3C_{23} + L_4C_{234}$
θ_4	$L_4C_{234}C_1$	$L_4C_{234}S_1$	L_4C_{234}

DYNAMIC ANALYSIS

FORMULA

$$T_i = \sum_{j=1}^{n} D_{ij}\ddot{q}_j + +I_{i(act)}\ddot{\theta}_i + \sum_{j=1}^{n}\sum_{k=1}^{n} D_{ijk}\dot{q}_j\dot{q}_k + D_i$$

FOR MULTI-AXIS ROBOT, TORQUE EQUATION

$$D_{ij} = \sum_{p=max\,(i,j)}^{n} Trace\,(U_{pj}J_pU_{pi}^T)$$

$$D_{ijk} = \sum_{p=max\,(i,j,k)}^{n} Trace\,(U_{pjk}J_pU_{pi}^T)$$

$$D_i = \sum_{p=i}^{n} -m_p g^T U_{pi}\bar{r}_p$$

DYNAMIC ANALYSIS

FORMULA

$$J_i = \begin{bmatrix} \frac{1}{2}(-I_{xx} + I_{yy} + I_{zz})_i & I_{ixy} & I_{ixz} & m_i\bar{x}_i \\ I_{ixy} & \frac{1}{2}(I_{xx} - I_{yy} + I_{zz})_i & I_{iyz} & m_i\bar{y}_i \\ I_{ixz} & I_{iyz} & \frac{1}{2}(I_{xx} + I_{yy} - I_{zz})_i & m_i\bar{z}_i \\ m_i\bar{x}_i & m_i\bar{y}_i & m_i\bar{z}_i & m_i \end{bmatrix}$$

PSUEDO INERTIA MATRIX IS USED WHERE EACH LINK INERTIA IS FOUND THROUGH SOLIDWORKS MASS PROPERTIES

DYNAMIC ANALYSIS

PATH

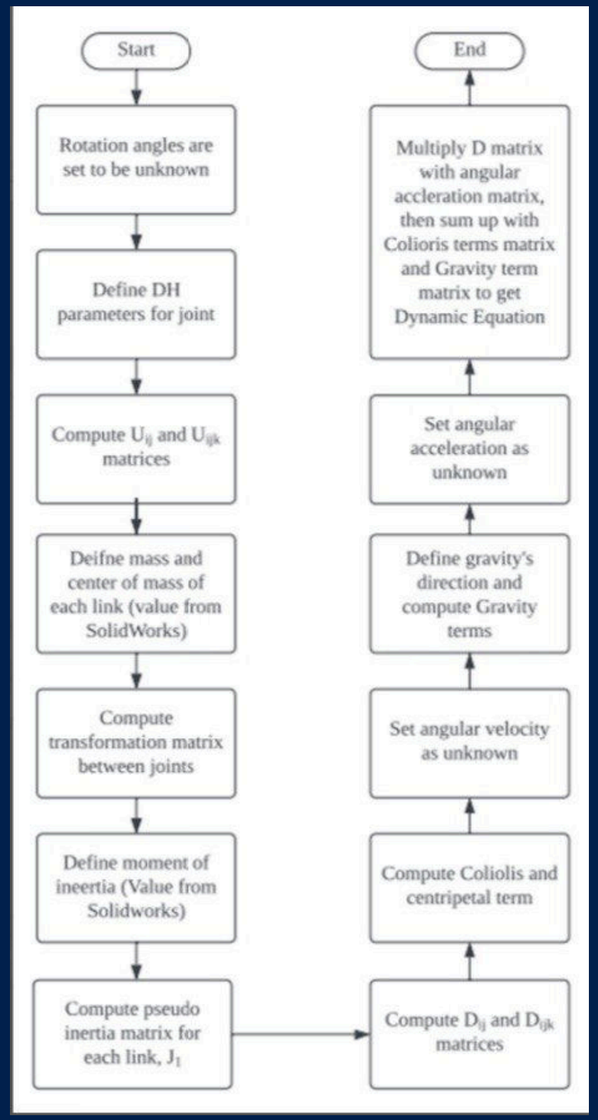

THE GENERAL FLOW IN OBTAINING THE DYNAMICS EQUATION FOR EACH JOINT

DYNAMIC ANALYSIS

TORQUE REPRESENTATION

$$\tau_1 = \sum_{j=1}^{4} D_{1j}\ddot{q}_j + \sum_{j=1}^{4}\sum_{k=1}^{4} D_{1jk}\dot{q}_j\dot{q}_k + D_1$$

$$\begin{aligned}\tau_1 = {} & D_{11}\ddot{\theta}_1 + D_{12}\ddot{\theta}_2 + D_{13}\ddot{\theta}_3 + D_{14}\ddot{\theta}_4 + D_{111}\dot{\theta}_1\dot{\theta}_1 + D_{112}\dot{\theta}_1\dot{\theta}_2 \\ & + D_{113}\dot{\theta}_1\dot{\theta}_3 + D_{114}\dot{\theta}_1\dot{\theta}_4 + D_{121}\dot{\theta}_2\dot{\theta}_1 + D_{122}\dot{\theta}_2\dot{\theta}_2 \\ & + D_{123}\dot{\theta}_2\dot{\theta}_3 + D_{124}\dot{\theta}_2\dot{\theta}_4 + D_{131}\dot{\theta}_3\dot{\theta}_1 + D_{132}\dot{\theta}_3\dot{\theta}_2 \\ & + D_{133}\dot{\theta}_3\dot{\theta}_3 + D_{134}\dot{\theta}_3\dot{\theta}_4 + D_{141}\dot{\theta}_4\dot{\theta}_1 + D_{142}\dot{\theta}_4\dot{\theta}_2 \\ & + D_{143}\dot{\theta}_4\dot{\theta}_3 + D_{144}\dot{\theta}_4\dot{\theta}_4 + D_1\end{aligned}$$

5 links which will produce 5 equations

DYNAMIC ANALYSIS

TORQUE REPRESENTATION

$$\tau_2 = \sum_{j=1}^{4} D_{2j}\ddot{q}_j + \sum_{j=1}^{4}\sum_{k=1}^{4} D_{2jk}\dot{q}_j\dot{q}_k + D_2$$

$$\begin{aligned}\tau_2 = {} & D_{21}\ddot{\theta}_1 + D_{22}\ddot{\theta}_2 + D_{23}\ddot{\theta}_3 + D_{24}\ddot{\theta}_4 + D_{211}\dot{\theta}_1\dot{\theta}_1 + D_{212}\dot{\theta}_1\dot{\theta}_2 \\ & + D_{213}\dot{\theta}_1\dot{\theta}_3 + D_{214}\dot{\theta}_1\dot{\theta}_4 + D_{221}\dot{\theta}_2\dot{\theta}_1 + D_{222}\dot{\theta}_2\dot{\theta}_2 \\ & + D_{223}\dot{\theta}_2\dot{\theta}_3 + D_{224}\dot{\theta}_2\dot{\theta}_4 + D_{231}\dot{\theta}_3\dot{\theta}_1 + D_{232}\dot{\theta}_3\dot{\theta}_2 \\ & + D_{233}\dot{\theta}_3\dot{\theta}_3 + D_{234}\dot{\theta}_3\dot{\theta}_4 + D_{241}\dot{\theta}_4\dot{\theta}_1 + D_{242}\dot{\theta}_4\dot{\theta}_2 \\ & + D_{243}\dot{\theta}_4\dot{\theta}_3 + D_{244}\dot{\theta}_4\dot{\theta}_4 + D_2\end{aligned}$$

$$\tau_3 = \sum_{j=1}^{4} D_{3j}\ddot{q}_j + \sum_{j=1}^{4}\sum_{k=1}^{4} D_{3jk}\dot{q}_j\dot{q}_k + D_3$$

$$\begin{aligned}\tau_3 = {} & D_{31}\ddot{\theta}_1 + D_{32}\ddot{\theta}_2 + D_{33}\ddot{\theta}_3 + D_{34}\ddot{\theta}_4 + D_{311}\dot{\theta}_1\dot{\theta}_1 + D_{312}\dot{\theta}_1\dot{\theta}_2 \\ & + D_{313}\dot{\theta}_1\dot{\theta}_3 + D_{314}\dot{\theta}_1\dot{\theta}_4 + D_{321}\dot{\theta}_2\dot{\theta}_1 + D_{322}\dot{\theta}_2\dot{\theta}_2 \\ & + D_{323}\dot{\theta}_2\dot{\theta}_3 + D_{324}\dot{\theta}_2\dot{\theta}_4 + D_{331}\dot{\theta}_3\dot{\theta}_1 + D_{332}\dot{\theta}_3\dot{\theta}_2 \\ & + D_{333}\dot{\theta}_3\dot{\theta}_3 + D_{334}\dot{\theta}_3\dot{\theta}_4 + D_{341}\dot{\theta}_4\dot{\theta}_1 + D_{342}\dot{\theta}_4\dot{\theta}_2 \\ & + D_{343}\dot{\theta}_4\dot{\theta}_3 + D_{344}\dot{\theta}_4\dot{\theta}_4 + D_3\end{aligned}$$

$$\tau_4 = \sum_{j=1}^{4} D_{4j}\ddot{q}_j + \sum_{j=1}^{4}\sum_{k=1}^{4} D_{4jk}\dot{q}_j\dot{q}_k + D_4$$

$$\begin{aligned}\tau_4 = {} & D_{41}\ddot{\theta}_1 + D_{42}\ddot{\theta}_2 + D_{43}\ddot{\theta}_3 + D_{44}\ddot{\theta}_4 + D_{411}\dot{\theta}_1\dot{\theta}_1 + D_{412}\dot{\theta}_1\dot{\theta}_2 \\ & + D_{413}\dot{\theta}_1\dot{\theta}_3 + D_{414}\dot{\theta}_1\dot{\theta}_4 + D_{421}\dot{\theta}_2\dot{\theta}_1 + D_{422}\dot{\theta}_2\dot{\theta}_2 \\ & + D_{423}\dot{\theta}_2\dot{\theta}_3 + D_{424}\dot{\theta}_2\dot{\theta}_4 + D_{431}\dot{\theta}_3\dot{\theta}_1 + D_{432}\dot{\theta}_3\dot{\theta}_2 \\ & + D_{433}\dot{\theta}_3\dot{\theta}_3 + D_{434}\dot{\theta}_3\dot{\theta}_4 + D_{441}\dot{\theta}_4\dot{\theta}_1 + D_{442}\dot{\theta}_4\dot{\theta}_2 \\ & + D_{443}\dot{\theta}_4\dot{\theta}_3 + D_{444}\dot{\theta}_4\dot{\theta}_4 + D_4\end{aligned}$$

For $i = 5$

$$\tau_5 = \sum_{j=1}^{5} D_{5j}\ddot{q}_j + \sum_{j=1}^{5}\sum_{k=1}^{5} D_{5jk}\ddot{q}_j\ddot{q}_k + D_5$$

$$\begin{aligned}\tau_5 = {} & D_{51}\ddot{\theta}_1 + D_{52}\ddot{\theta}_2 + D_{53}\ddot{\theta}_3 + D_{54}\ddot{\theta}_4 + D_{55}\ddot{\theta}_5 \\ & + D_{511}\dot{\theta}^2{}_1 + D_{522}\dot{\theta}^2{}_2 + D_{533}\dot{\theta}^2{}_3 \\ & + D_{544}\dot{\theta}^2{}_4 + D_{555}\dot{\theta}^2{}_5 + D_{512}\dot{\theta}_1\dot{\theta}_2 \\ & + D_{513}\dot{\theta}_1\dot{\theta}_3 + D_{514}\dot{\theta}_1\dot{\theta}_4 + D_{515}\dot{\theta}_1\dot{\theta}_5 \\ & + D_{521}\dot{\theta}_2\dot{\theta}_1 + D_{523}\dot{\theta}_2\dot{\theta}_3 + D_{524}\dot{\theta}_2\dot{\theta}_4 \\ & + D_{525}\dot{\theta}_2\dot{\theta}_5 + D_{531}\dot{\theta}_3\dot{\theta}_1 + D_{532}\dot{\theta}_3\dot{\theta}_2 \\ & + D_{534}\dot{\theta}_3\dot{\theta}_4 + D_{535}\dot{\theta}_3\dot{\theta}_5 + D_{541}\dot{\theta}_4\dot{\theta}_1 \\ & + D_{542}\dot{\theta}_4\dot{\theta}_2 + D_{543}\dot{\theta}_4\dot{\theta}_3 + D_{545}\dot{\theta}_4\dot{\theta}_5 \\ & + D_{551}\dot{\theta}_5\dot{\theta}_1 + D_{552}\dot{\theta}_5\dot{\theta}_2 + D_{553}\dot{\theta}_5\dot{\theta}_3 \\ & + D_{554}\dot{\theta}_5\dot{\theta}_4 + D_5\end{aligned}$$

DYNAMIC ANALYSIS

MASS , CENTRE OF MASS AND MOMENT OF INERTIA

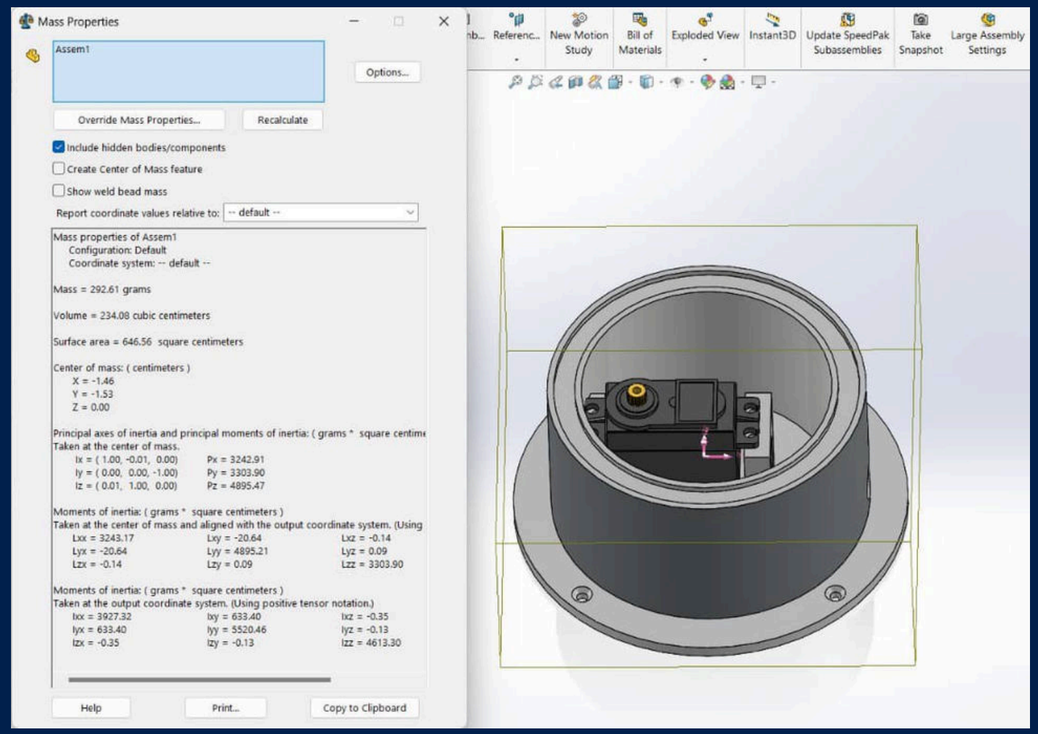

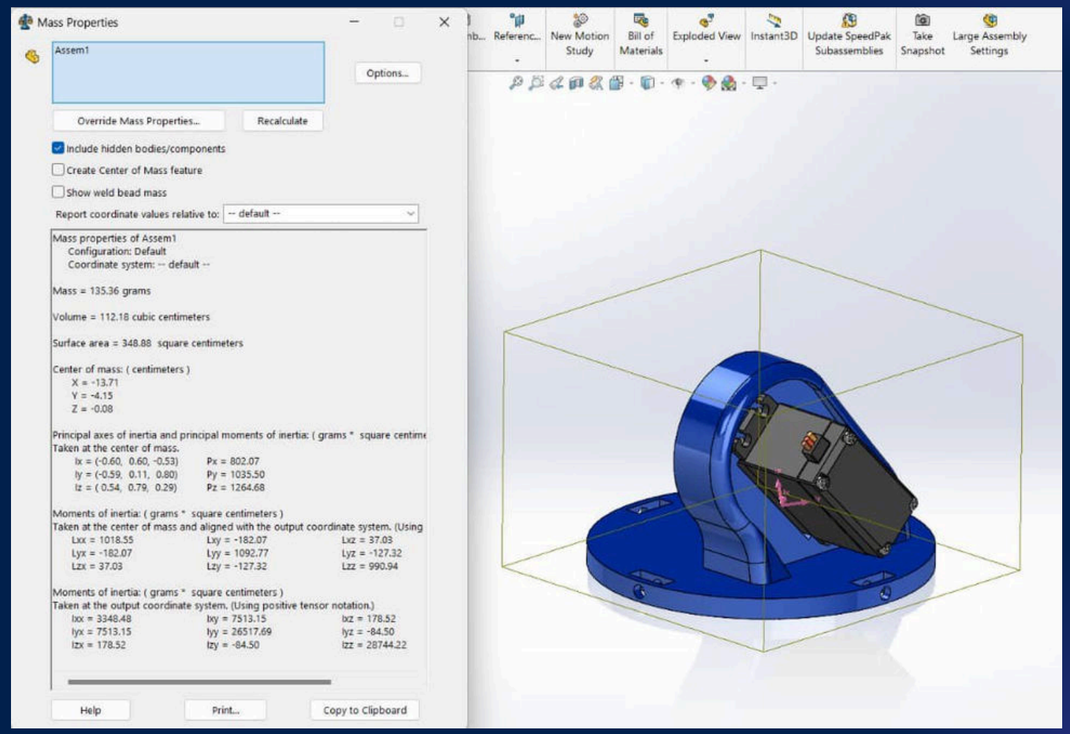

DYNAMIC ANALYSIS

MASS , CENTRE OF MASS AND MOMENT OF INERTIA

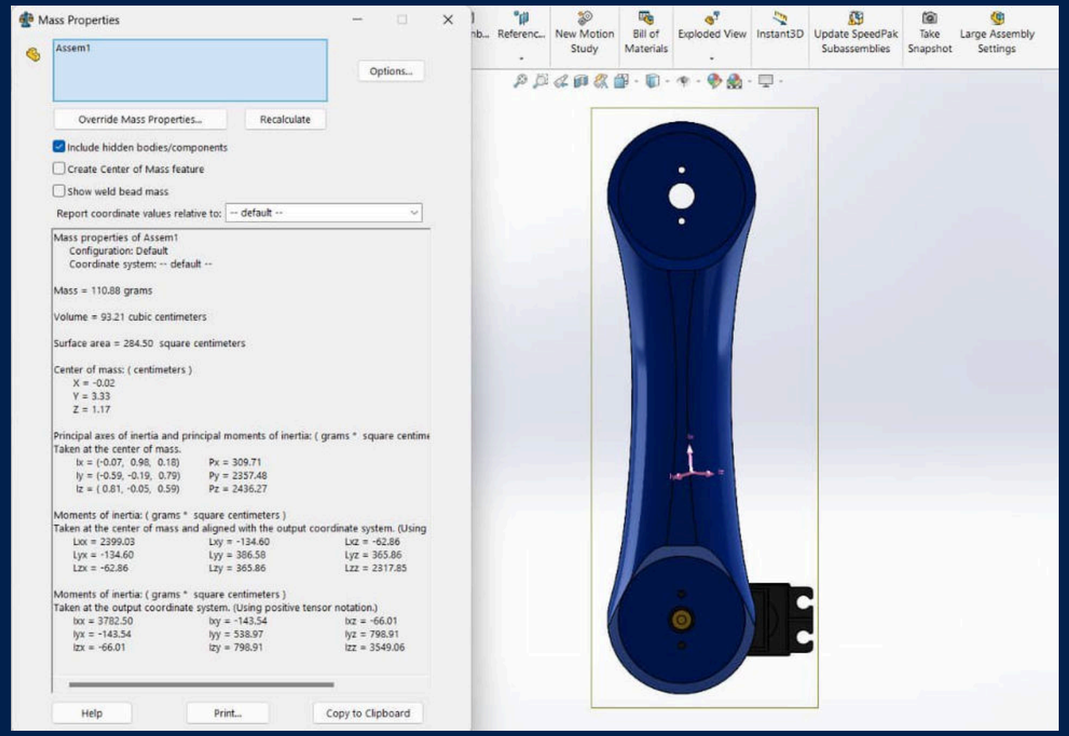

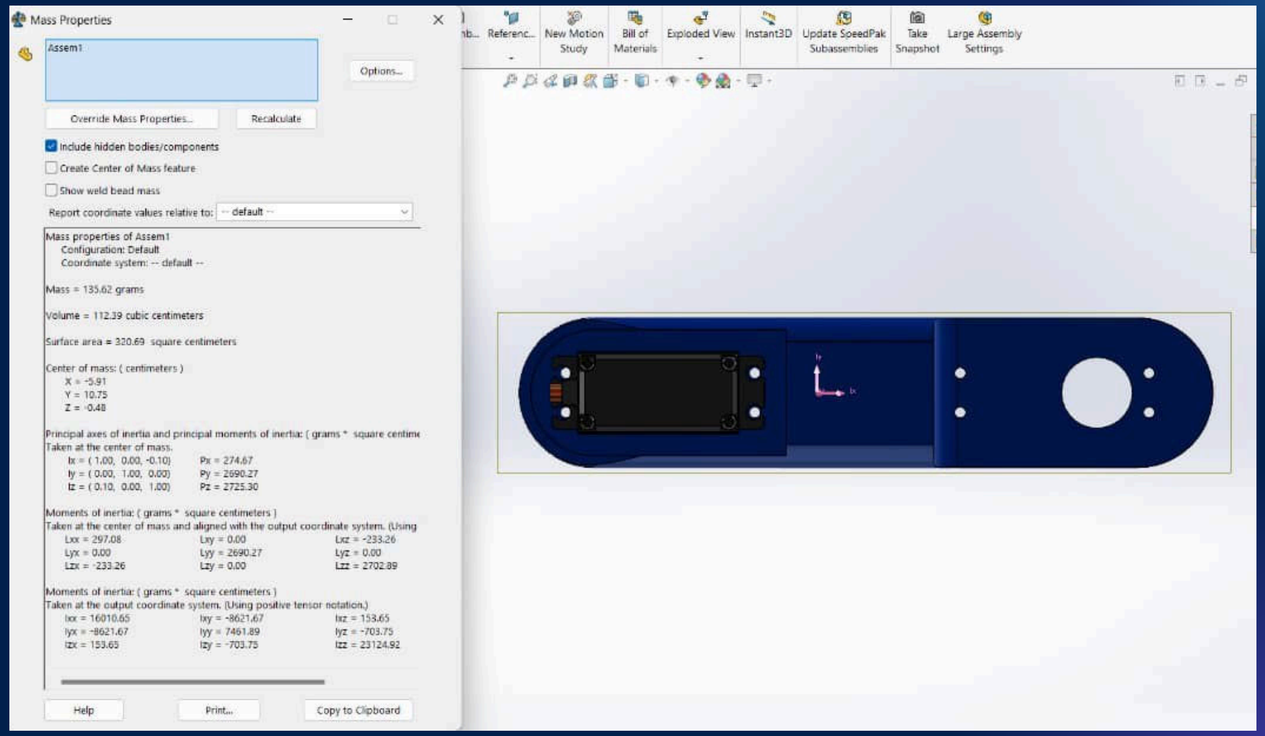

DYNAMIC ANALYSIS

MASS , CENTRE OF MASS AND MOMENT OF INERTIA

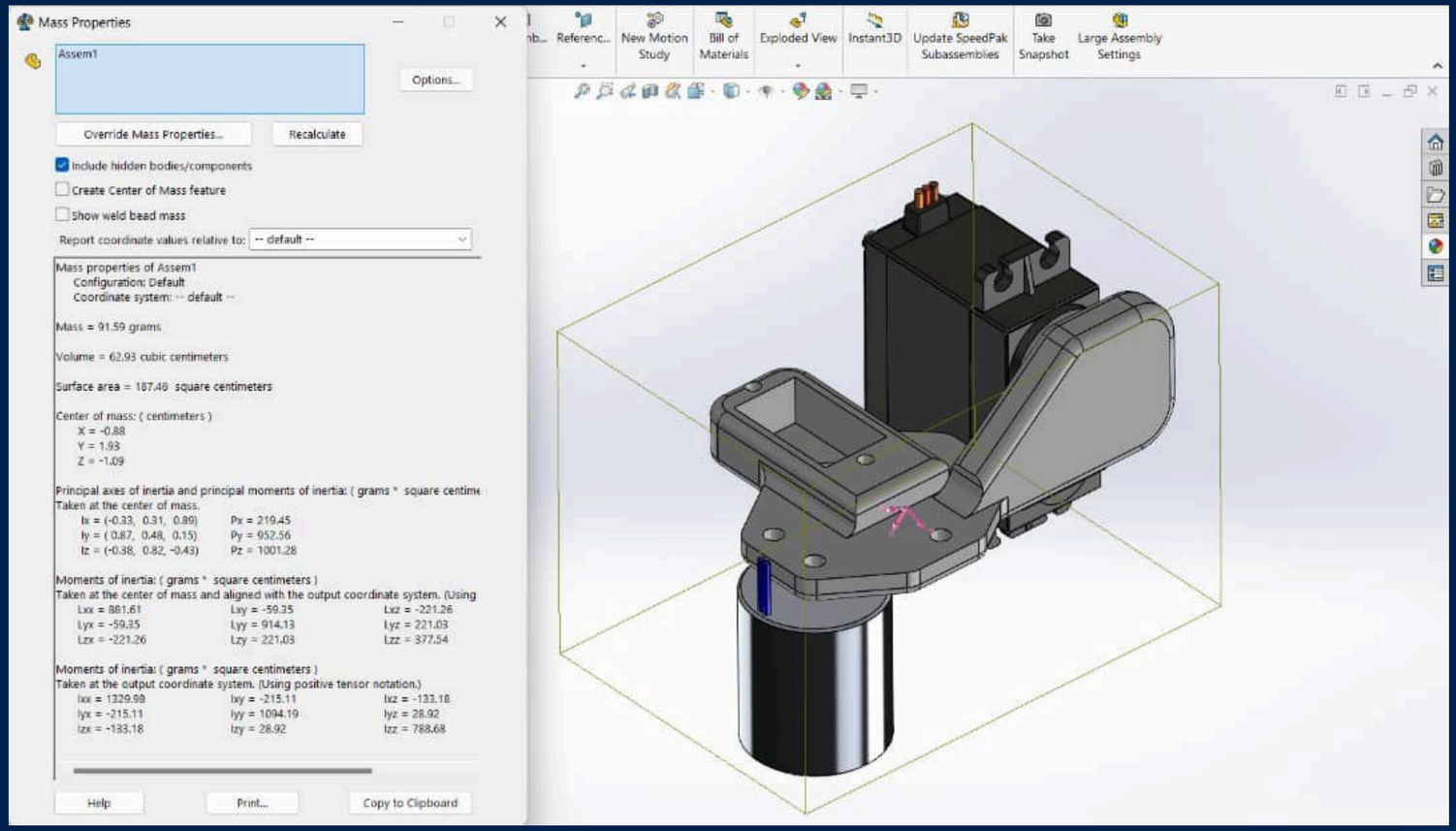

INVERSE KINEMATICS

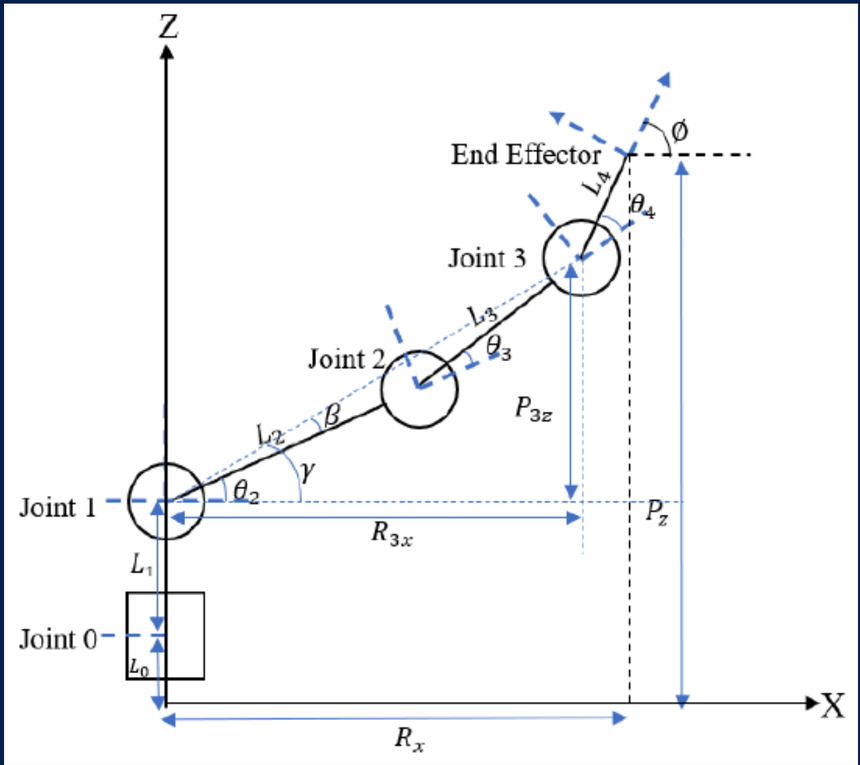

$$\emptyset = sin^{-1}\left(\frac{P_z - P_{3z} - L_0 - L_1}{L_4}\right)$$

$$\emptyset = \theta_2 + \theta_3 + \theta_4$$

$$R_x = \sqrt{P_x^{\,2} + P_y^{\,2}}$$

$$\theta_1 = tan^{-1}\left(\frac{P_y}{P_x}\right)$$

$$\theta_2 = tan^{-1}\frac{P_z - L_0 - L_1 - L_4 \sin\emptyset}{R_x - L_4\cos\emptyset} - tan^{-1}\frac{L_3 \sin\theta_3}{L_2 + L_3\cos\theta_3}$$

$$\theta_3 = cos^{-1}\left[\frac{[P_z - L_0 - L_1 - L_4 \sin\emptyset]^2 + [R_x - L_4\cos\emptyset]^2 - L_2^{\,2} - L_3^{\,2}}{2L_2L_3}\right]$$

$$\theta_4 = \emptyset - \theta_2 - \theta_3$$

TRAJACTORY PLANNING

No.	Joint 1	Joint 2	Joint 3	Joint 4	End Point [X,Y,Z]	Description
1.	0°	47°	70°	94°	[23,-10,15]	Centered and raising Robotic Arm for initialization
2.	0°	47°	70°	94°	[23,0,15]	Go to picking up location
3.	0°	78°	44°	36°	[23,0,0]	Lower Robotic Arm to pick the lid
4.	0°	47°	70°	94°	[23,0 15]	Raise Robotic Arm and the lid
5.	0°	47°	70°	94°	[23,-20,15]	Go to assembly location
6.	0°	78°	44°	36°	[23,-20,0]	Lower the robotic arm to assemble lid and the base

Trajaction Planning

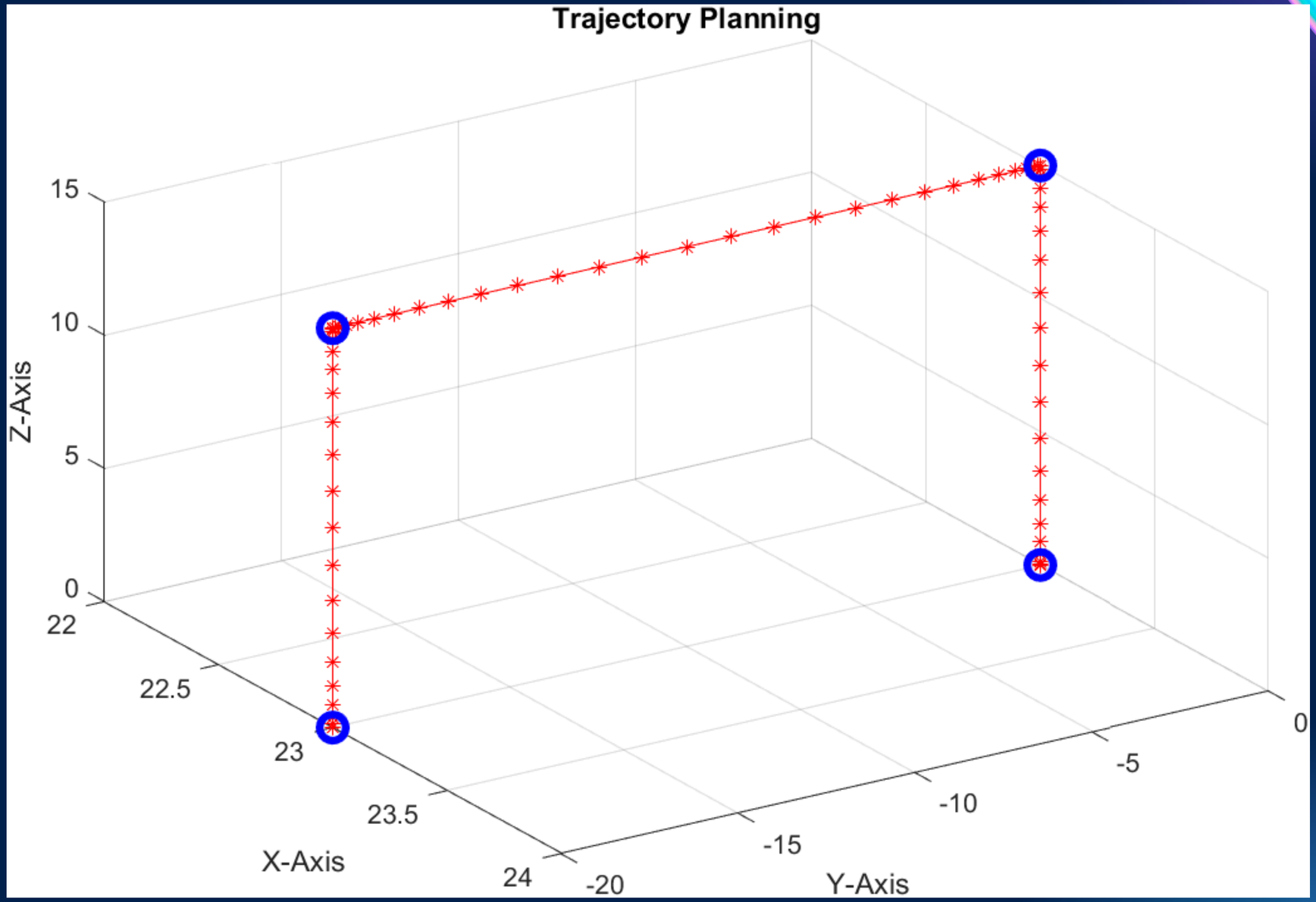

Simulation With Peter Corke Robotics Toolbox

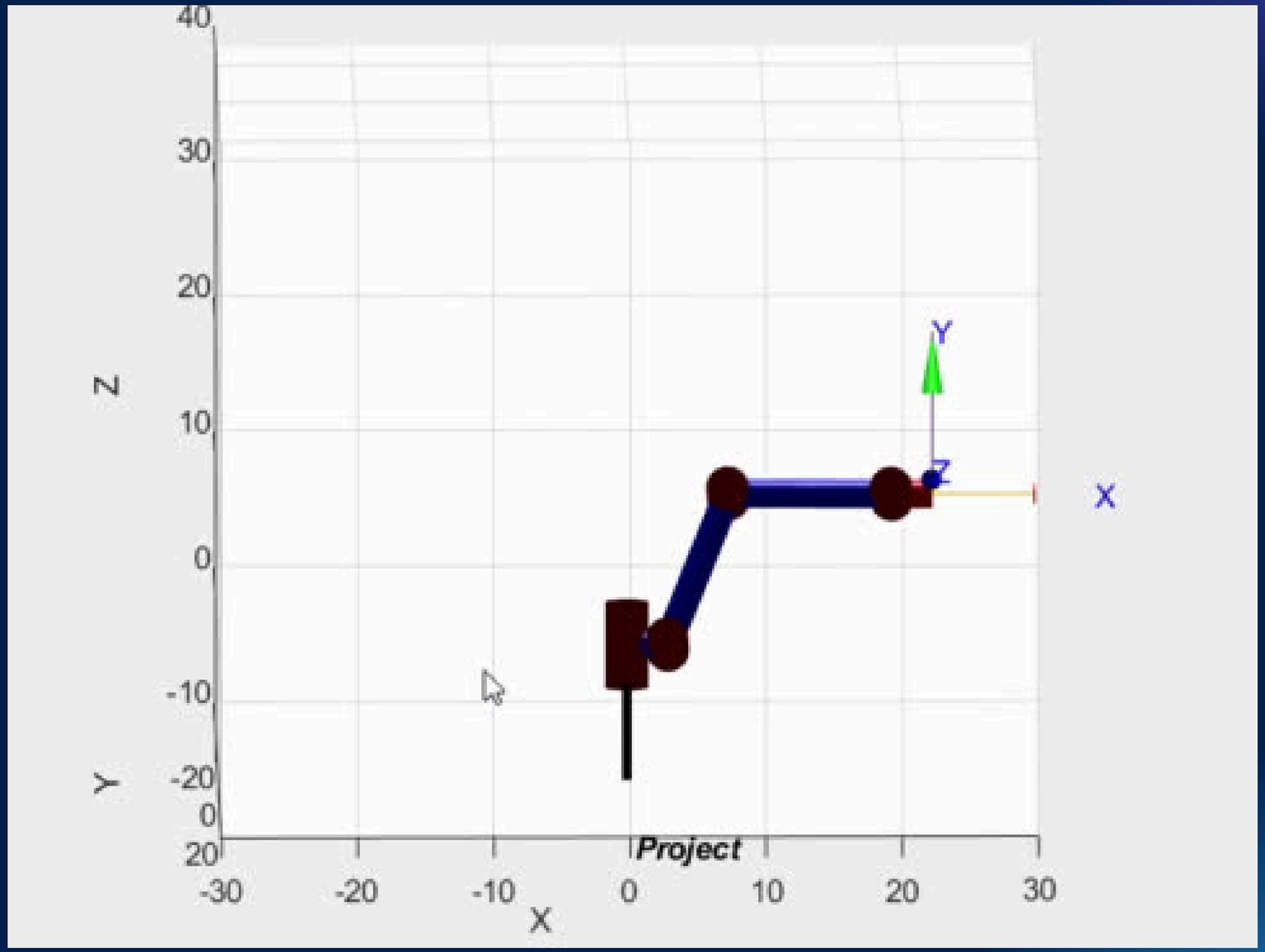

Trajection Planning

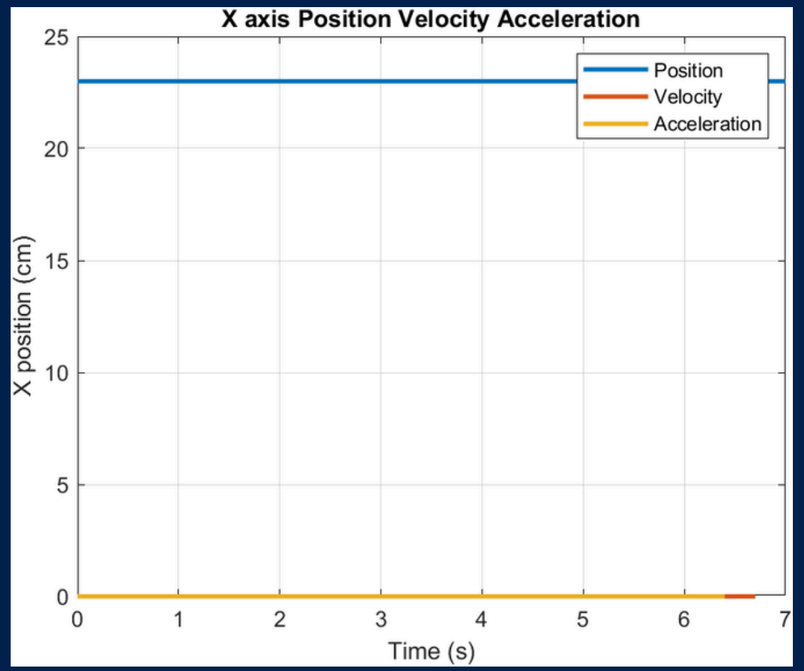

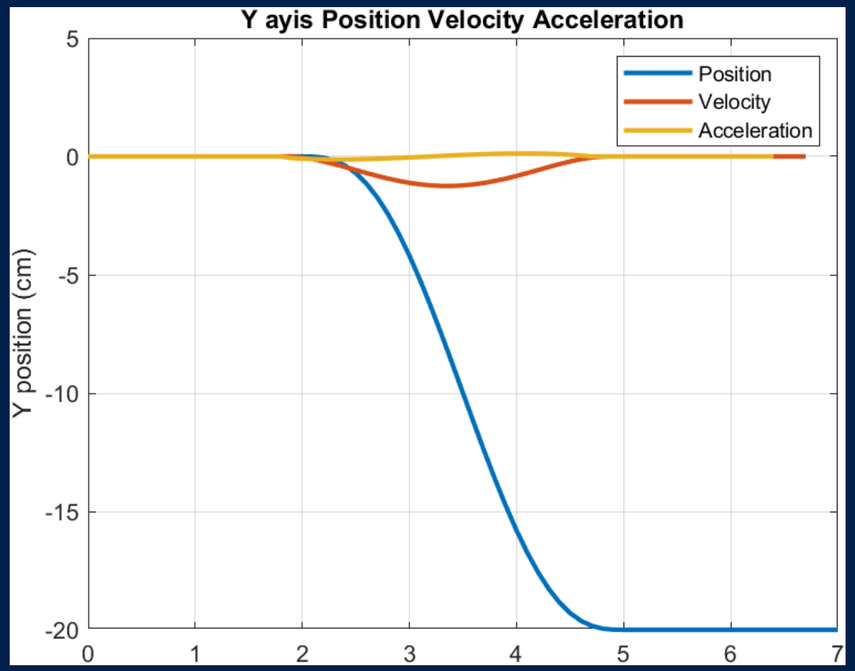

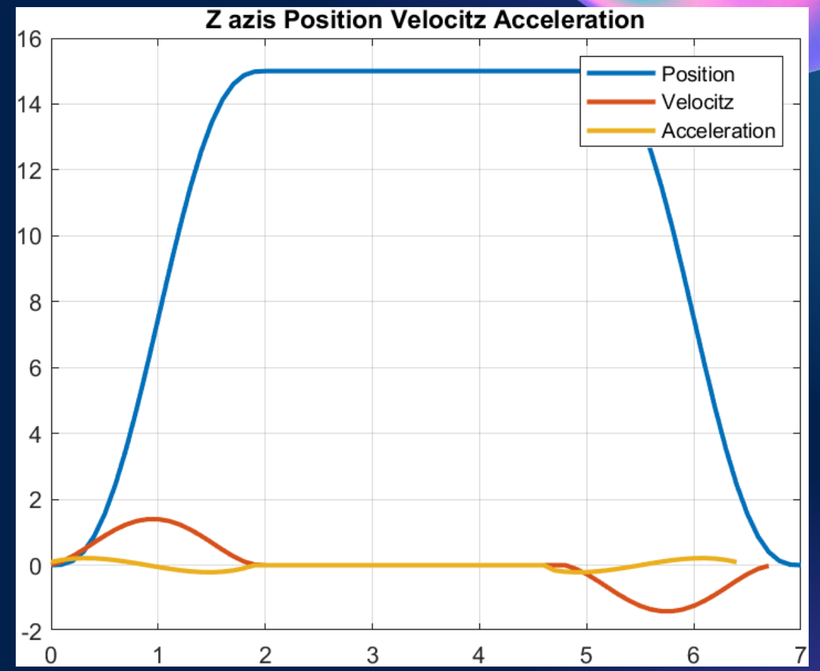

Simulation With Peter Corke Robotics Toolbox

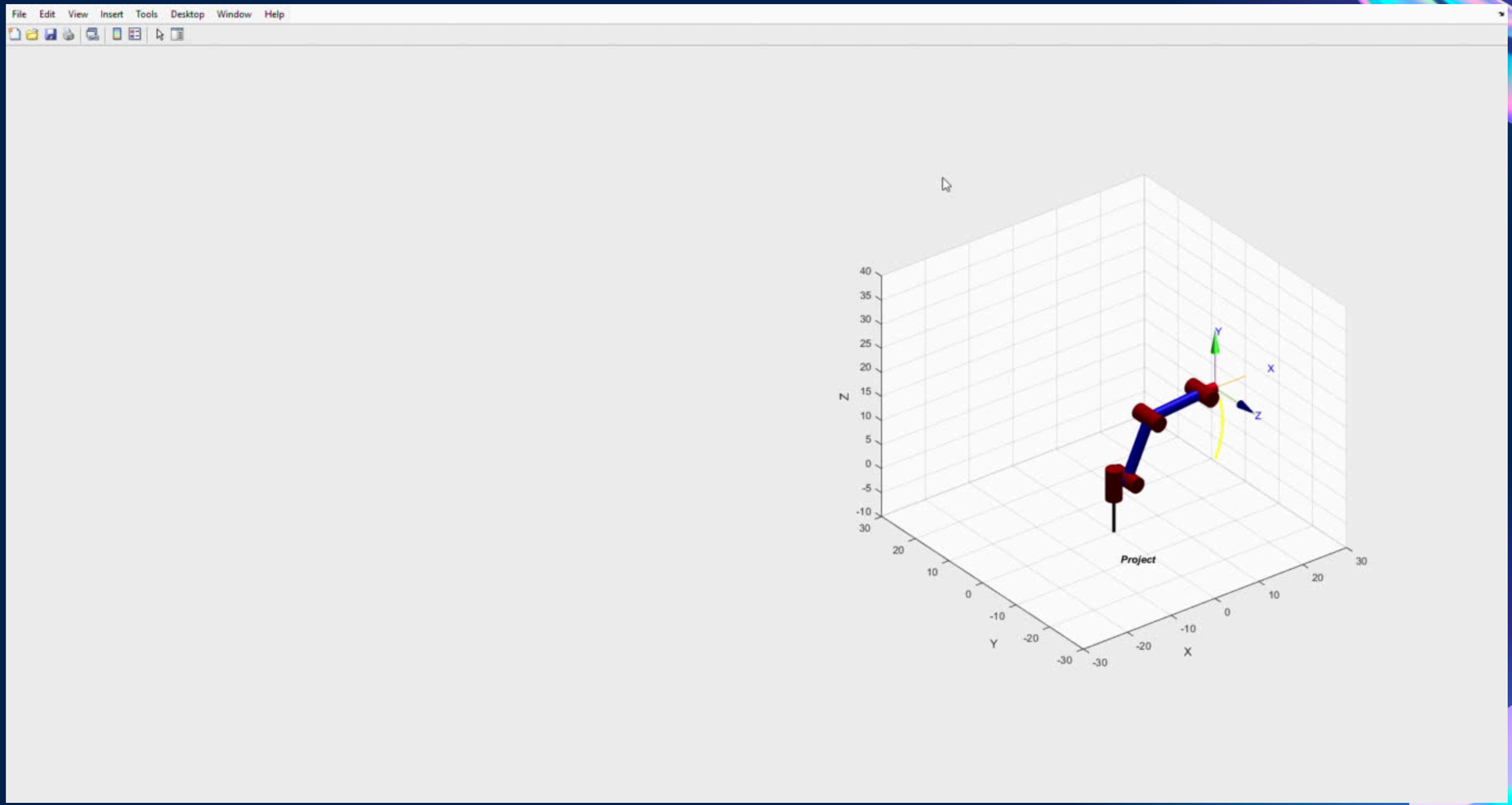

Workspace

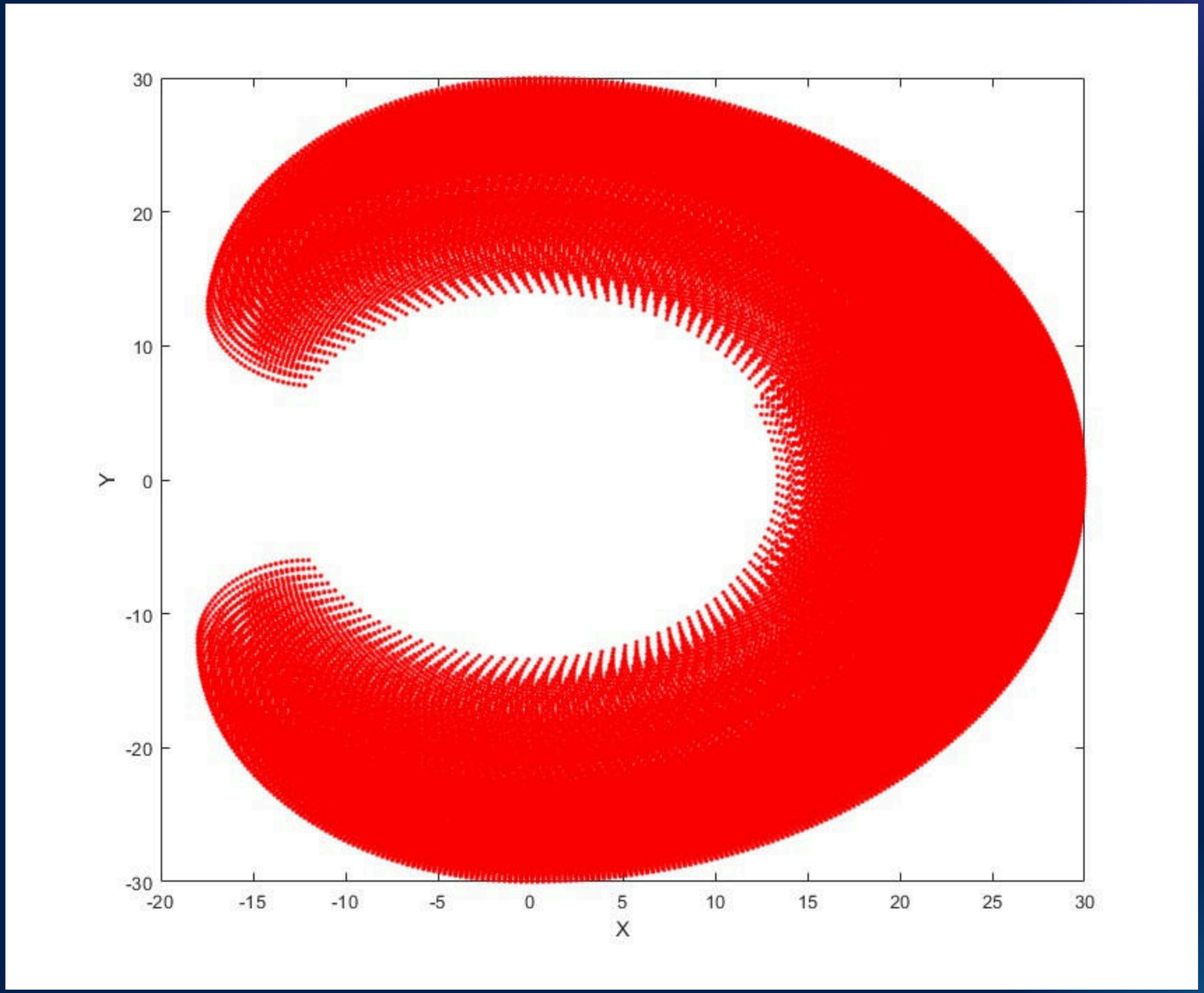

DISCUSSION

STRENGTHS:

- Has 5 DOF which is able to move flexibly
- Able to perform precise movement
- Has a rail which allows it to move accurately in the y axis

WEAKNESS:

- Material that was used to build robot was not strong enough
- Offset in the joints which reduces accuracy
- servo motor used was standard which has load limitations

DISCUSSION

STRENGTHS:

- Has 5 DOF which is able to move flexibly
- Able to perform precise movement
- Has a rail which allows it to move accurately in the y axis

WEAKNESS:

- Material that was used to build robot was not strong enough
- Offset in the joints which reduces accuracy
- servo motor used was standard which has load limitations

PHYSICAL PROTOTYPE

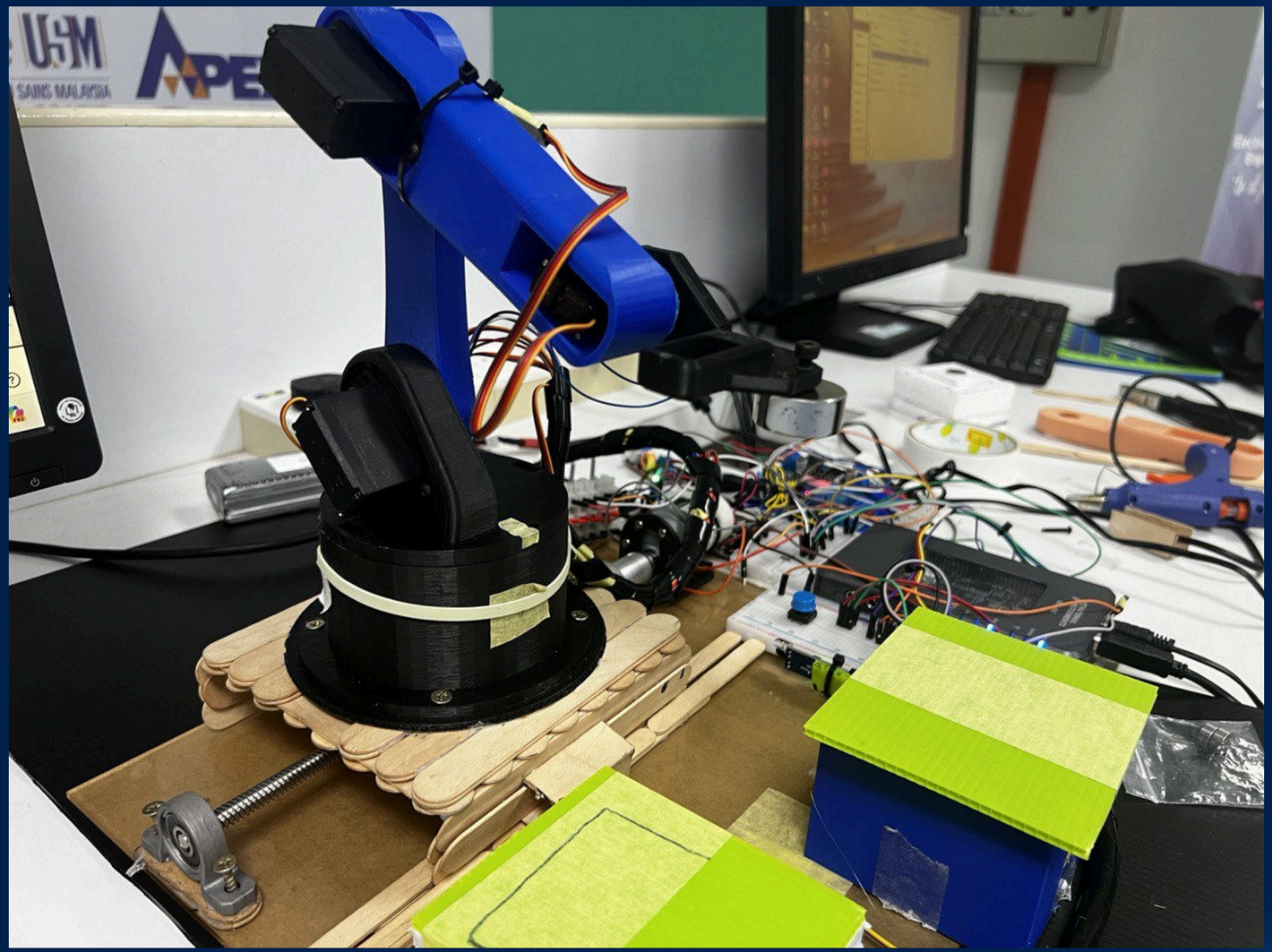

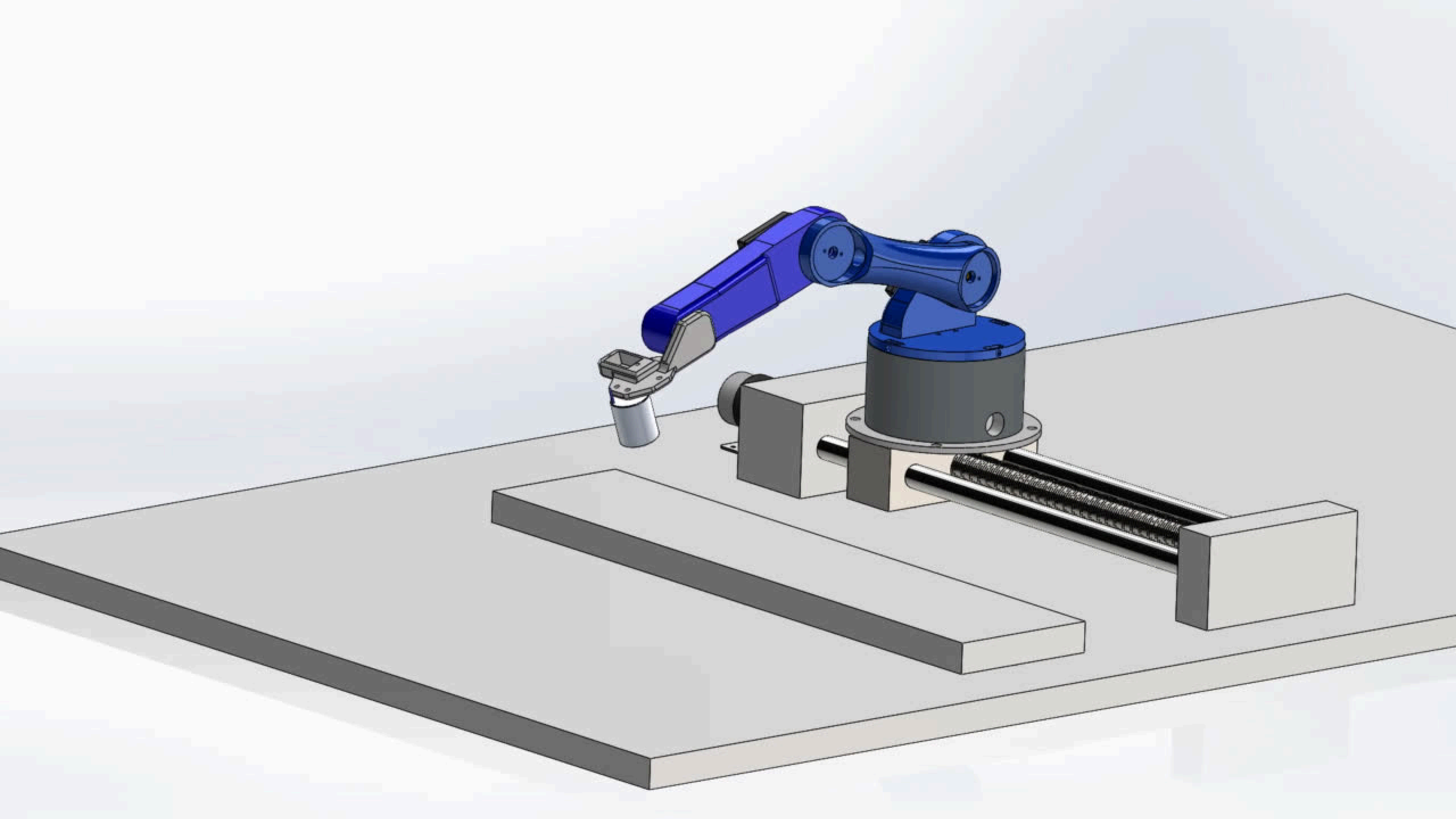

Future works

To enhance the design as well as properties of the robot, a few changes could be made:

- Allow for more degree of freedom to enhance flexibility
- Force and torque sensors should be implemented at critical joints to provide real time feedback

Thank you!

passion follows desire.