BEST SUSTAINABLE BUILDING

BROUGHT BY

TEAM

MECHA-MECHY

MECHANIZE!



USM UNIVERSITI SAINS MALAYSIA · APEX · BHEPA USM · IEEE USM STUDENT BRANCH · MAKERTHON 2024

Mecha-Mechy

INTRODUCING OUR TEAM

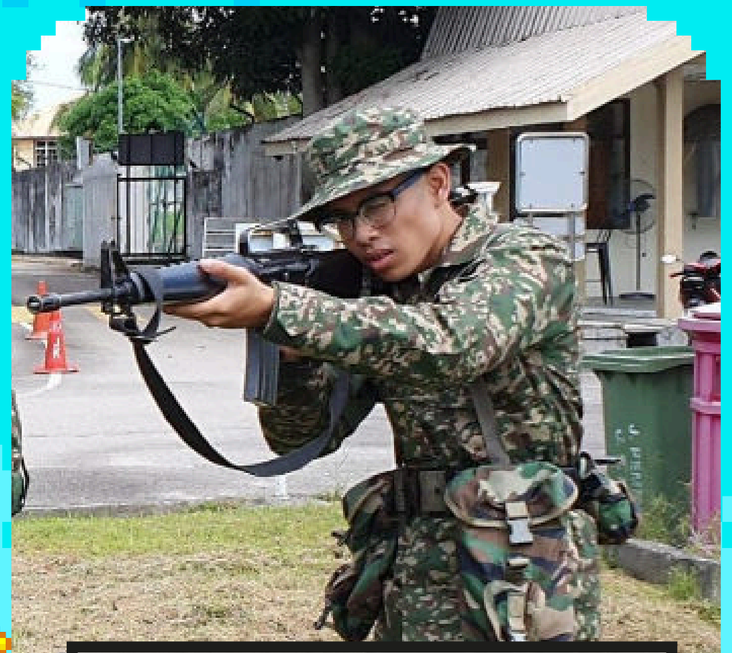

MUHAMMAD AFFAN NUR IMAN BIN AZMAN

3RD YEAR MECHATRONIC



LEE YEN FEI

2ND YEAR ELECTRONIC



FATIN NUR IZZATI BINTI JAMAL ABD.NASIR

1ST YEAR MECHANICAL

Mecha-Mechy

SMART BUILDING SYSTEM

{ CREATING THE SMARTER AND MORE SUSTAINABLE USM }



INTRODUCTION

- RISING URBANIZATION: MORE PEOPLE LIVING IN CITIES, INCREASING CHALLENGES.
- SUSTAINABILITY IMPERATIVE: BALANCING PRESENT NEEDS WITH FUTURE GENERATIONS' NEEDS.
- SMART BUILDING POTENTIAL: ARDUINO ENHANCES EFFICIENCY AND COMFORT.
- ADDRESSING GLOBAL CHALLENGES: ALIGNING WITH UN SUSTAINABLE DEVELOPMENT GOALS.
- ENVIRONMENTAL AWARENESS: NEED FOR SUSTAINABLE SOLUTIONS IN CONSTRUCTION AND MANAGEMENT.

Mecha-Mechy

PROBLEM STATEMENT

WASTE MANAGEMENT
CURRENT PRACTICES LACK RECYCLING AND WASTE REDUCTION FOCUS (SDG 12).

DATA ANALYTICS FOR SUSTAINABILITY
BUILDINGS LACK REAL-TIME DATA FOR OPTIMIZATION.

ENERGY EFFICIENCY IN ROOMS
ADDRESSING UNNECESSARY ELECTRICITY USAGE (SDG 7).

SMART BUILDING OPTIMIZATION
ENHANCING SUSTAINABILITY PERFORMANCE THROUGH DATA ANALYTICS.)

OBJECTIVES

1. IOT WASTE MANAGEMENT SYSTEM: ENHANCE CLEANLINESS AND RECYCLING AWARENESS AMONG STUDENTS.

2. AUTOMATED ENERGY SAVING SYSTEM: REDUCE UNNECESSARY ENERGY CONSUMPTION IN ROOMS.

3. OCCUPANCY-BASED POWER CONTROL: EFFICIENTLY MANAGE POWER BASED ON ROOM OCCUPANCY.

4. SMART WASTE RECYCLING SYSTEM: IMPROVE WASTE MANAGEMENT FOR A GREENER ENVIRONMENT.

5. ENHANCED ROOM AUTOMATION: IMPROVE ROOM COMFORT AND ENERGY EFFICIENCY.

METHODOLOGY

PROBLEM INVESTIGATION

SURVEY NEWS AND CONDUCT STUDENT SURVEYS

SOLIDWORKS FOR DESIGN

CREATE DETAILED 3D MODEL MOCKUP

SMART ROOM POWER SYSTEM

FEATURES MOTION AND IR SENSORS FOR EFFICIENCY

WASTE MANAGEMENT SYSTEM

UTILIZES IOT FOR EFFICIENT WASTE MANAGEMENT

ARDUINO IDE PROGRAMMING

DEVELOPS MICROCONTROLLER CODE FOR SENSOR CONTROL

USER ACCEPTANCE TESTING

ASSESS USABILITY AND EFFECTIVENESS WITH USM USERS

REFINEMENT AND IMPROVEMENT

ENHANCE SYSTEM BASED ON FEEDBACK AND TESTING

Mecha-Mechy



SMART SUBSYSTEMS

NON-ORGANIC WASTE SEGREGATION SYSTEM



Main Concept

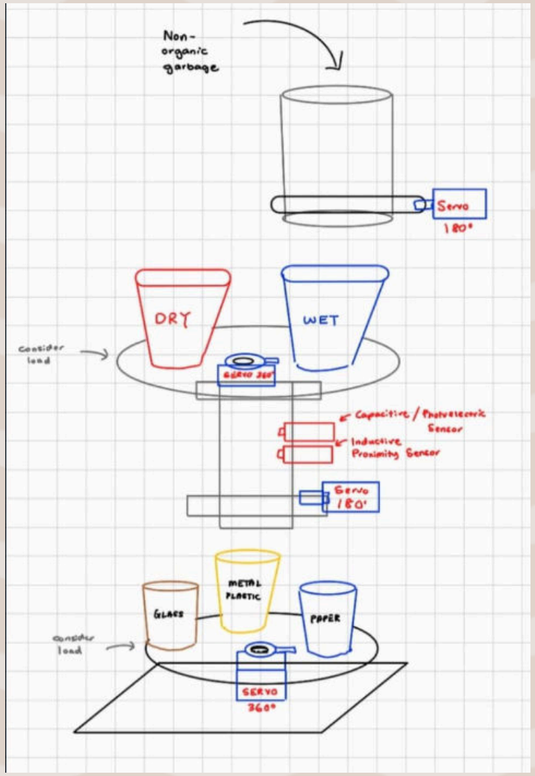

- This is Non-Organic Waste Segregation System
- Main objective for this system is to sort dry and wet waste then sort it again to three types of waste which is Plastic, Paper and Metal.
- This system is allign with our sustainable goal which is SDG11 and SDG12.

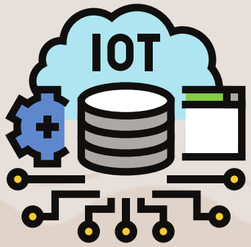





Mecha-Mechy



CIRCUITRY OF NON-ORGANIC WASTAGE SEGREGATION



COMPONENTS

- Servo 360 Deg
- Servo 180 Deg
- Inductive Proximity Sensor
- Capacitive Proximity Sensor
- IR Sensor
- Ultrasonic Sensor (3)
- LED
- ESP32 Microcontroller
- 16*2 LCD
- Buzzer
- 5V Fan

There will be slight change in circuit for better improvement

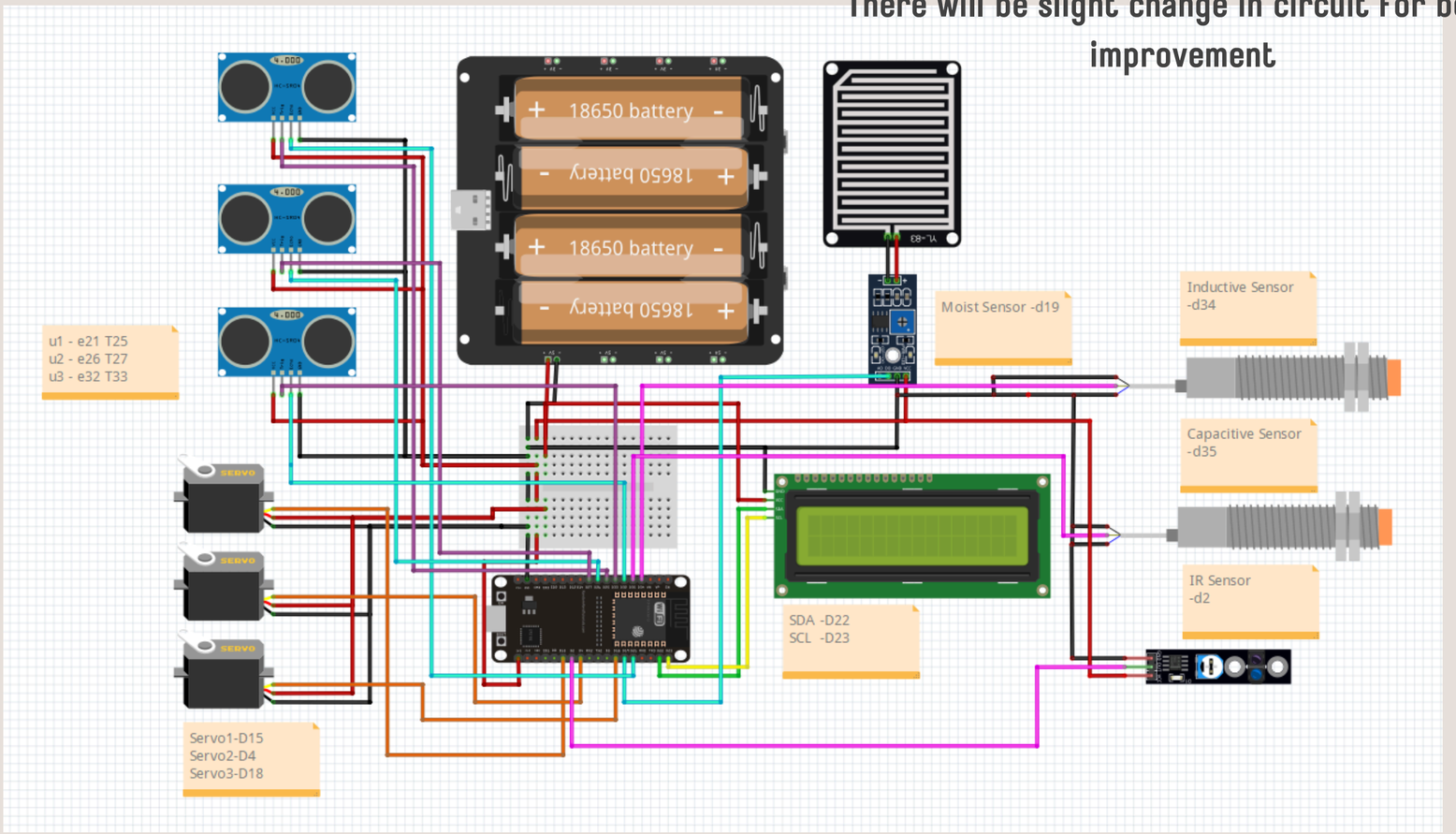



Mecha-Mechy

3D DESIGN OF NON-ORGANIC WASTAGE SEGREGATION SYSTEM

3D MODEL MECHANICAL DESIGN

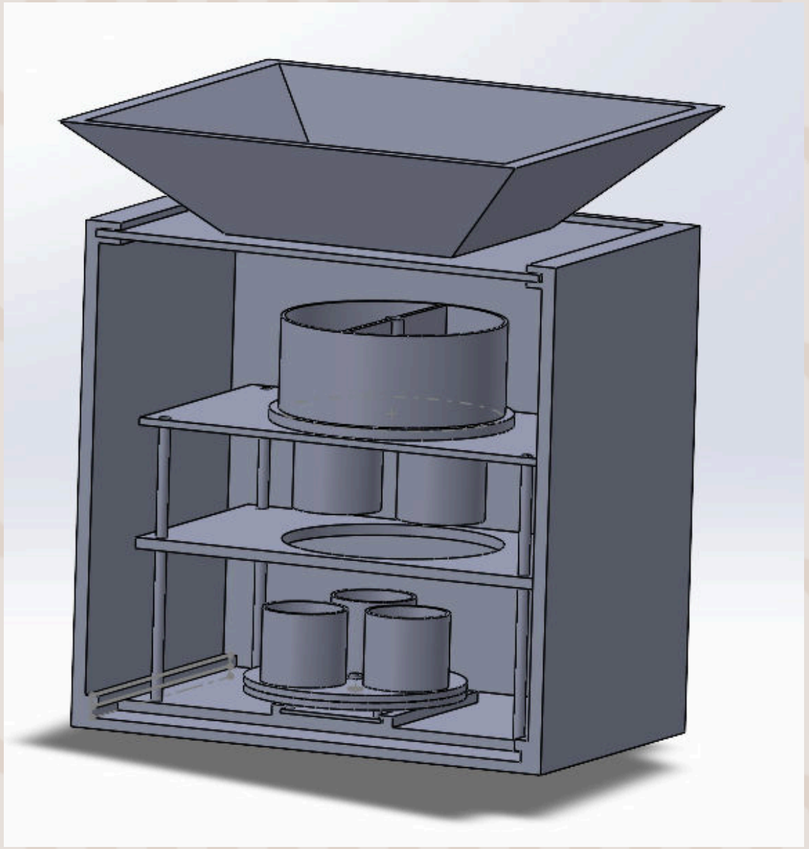

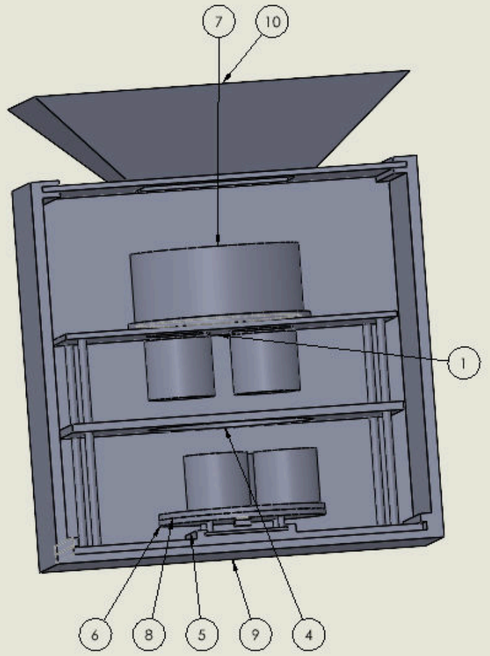

ITEM NO.	PART NUMBER	DESCRIPTION	QTY.
1	Part3-Base Plat DryWet		1
2	Part4-ComponentServoMotor		2
3	Part5- Long Brass Connector for M3 Screw		4
4	Part7- Middle Plat		1
5	Part8- Bottom Base Slider		1
6	Part1-Base Rotating		1
7	Part6-Base Rotating Plat DryWet		1
8	Part2- Base Plate Rotating with RecycleBin		1
9	Part9-Casing Trash		1
10	Part10-Trash Way In and Blocker		1

UNLESS OTHERWISE SPECIFIED: DIMENSIONS ARE IN MILLIMETERS SURFACE FINISH: TOLERANCES: LINEAR: ANGULAR:
FINISH
DEBURR AND BREAK SHARP EDGES
DO NOT SCALE DRAWING
REVISION
NAME | SIGNATURE | DATE
DRAWN
CHK'D
APPV'D
MFG
Q.A
MATERIAL:
WEIGHT:
TITLE: Non-Organic Waste Segregation
DWG NO. Mecha-Mechy
A3
SCALE: 1:20
SHEET 1 OF 1

Mecha-Mechy

7 AFFORDABLE AND CLEAN ENERGY

SMART ROOM SYSTEM

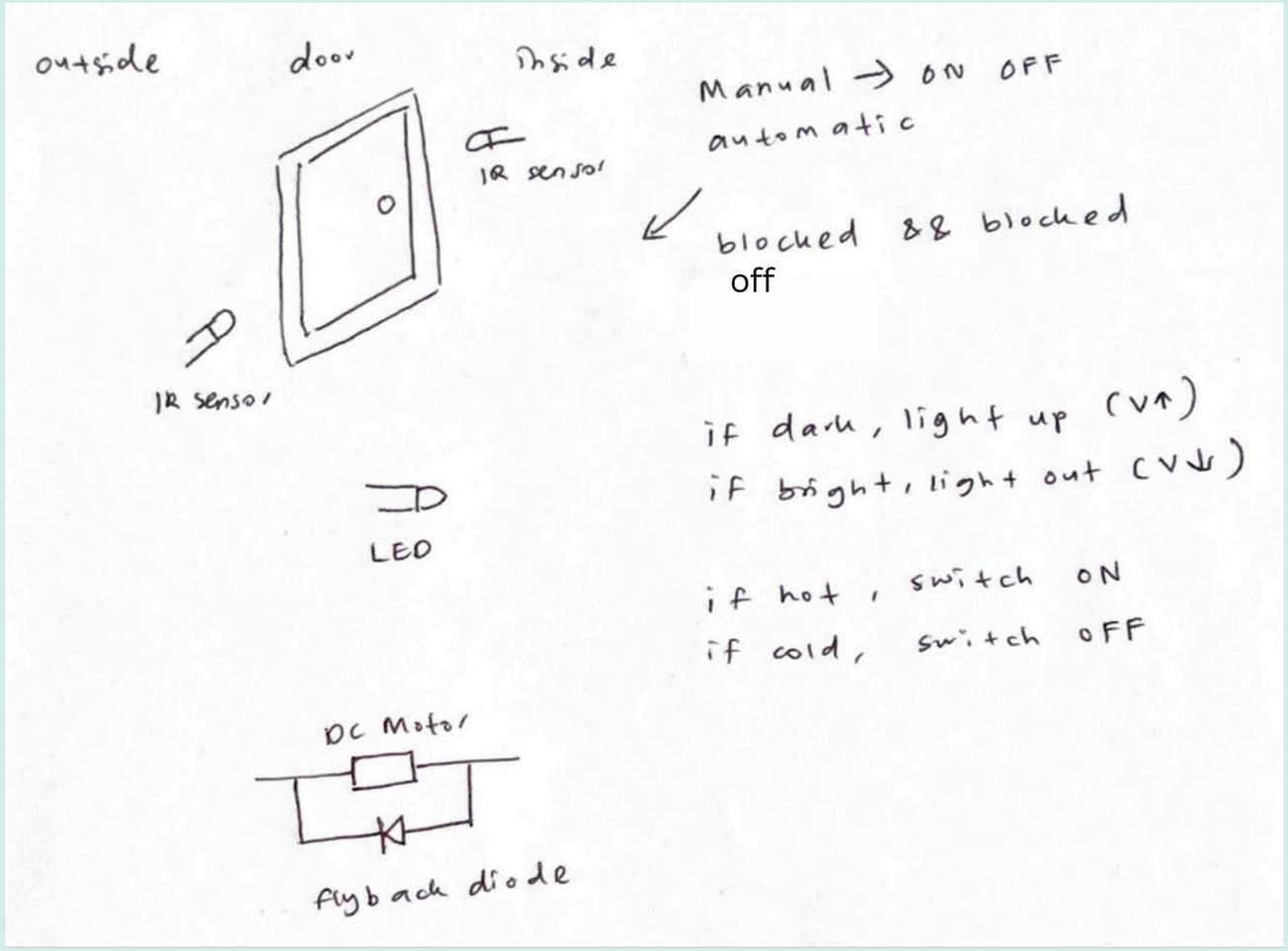

CIRCUITRY OF SMART ROOM SYSTEM

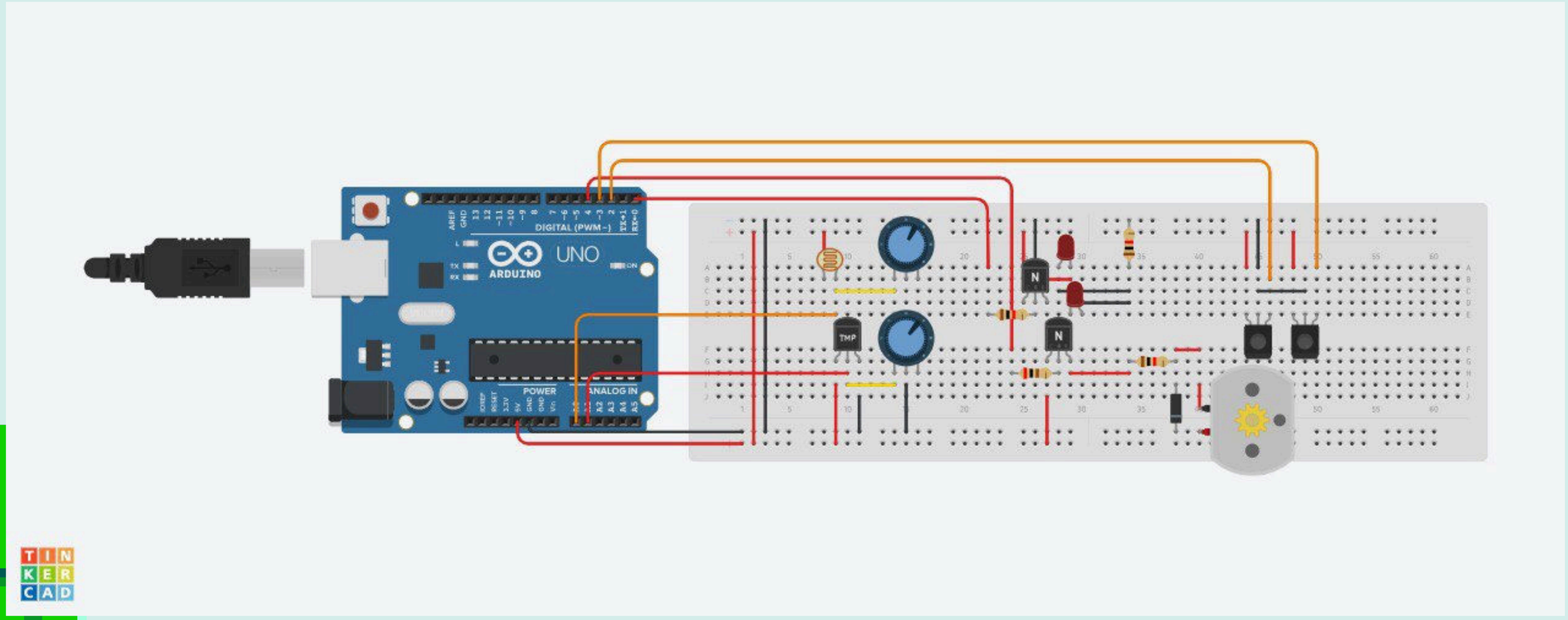

MARKET RESEARCH

1. 85% of buildings aim for sustainability by 2025

   Source: Global Market Insights

2. Smart building market to reach $160B by 2026

   Source: Grand View Research

3. 90% of occupants prefer smart building features

   Source: Deloitte

4. ROI (Return on investment) of smart building technologies up to 10%

   Source: MarketsandMarkets

5. Increasing regulations favor green buildings

   Source: US Green Building Council

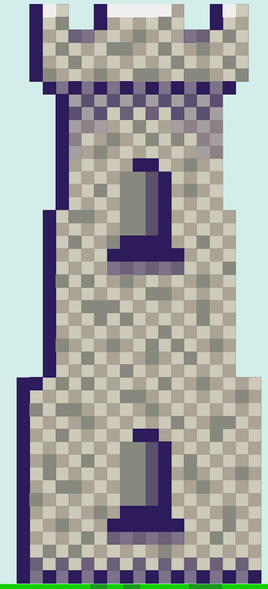

COSTING

COMPONENTS	QUANTITY	PRICE PER QUANTITY (RM)
LED 5MM - RED		0.10
LED 5MM - GREEN		0.10
LED 5MM - YELLOW		0.10
JUMPER WIRE (MALE TO MALE)		4.50
JUMPER WIRE (MALE TO FEMALE)		2.00
JUMPER WIRE (FEMALE TO FEMALE)		2.00
ESP32 30PIN	2	30.00

I2C 16*2 LCD 4 PIN (BLUE)	2	12.90
DHT11 TEMPERATURE AND HUMIDITY SENSOR	2	5.80
HC-SR501 PIR SENSOR MODULE	1	3.90
GRADE A 3200MAH 3.7V 18650 BATTERY (WHITE)	2	13.50
HC-04 ULTRASONIC RANGING MODULE	3	3.90
SG90 SERVO MOTOR 180 DEGREE	4	6.90
6V 3W SOLAR PANEL	1	30.00
2*18650 BATTERY HOLDER	1	2.50

IR SENSOR MODULE	5	3.20
SWITCH (PLACEABLE ON BREADBOARD)	3	3.00
INDUCTIVE SENSOR	1	14.90
TOTAL		248.80





A Call to Action:

PROJECT DEMONSTRATION



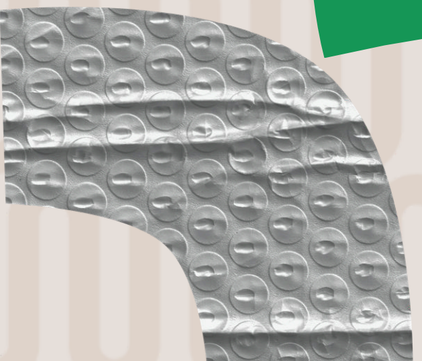

Mecha-Mechy

FUTURE IMPROVEMENT

- **ADD -SUSTAINABLE AND NOISE MAKER'S SPACE ROOM SYSTEM**

- **SMART INFORMATIVE SCREEN SYSTEM**
- Show the schedule of the shuttle bus and guide for student's wellfare and informative info

SUBSYSTEM (NON-ORGANIC WASTE SEGREGATION SYSTEM)

- Add Automated Cleaner Robot with line follower path

- **ADD -ORGANIC WASTE COMPOSTING SYSTEM**

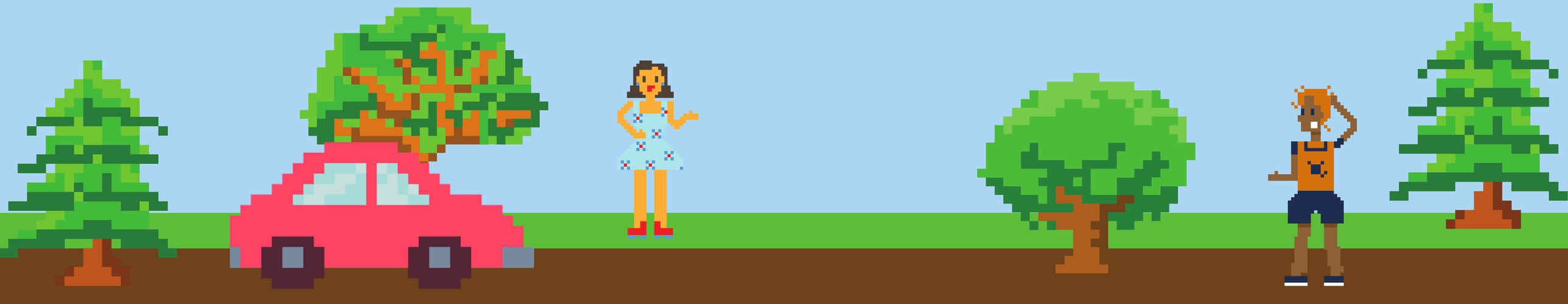

Q & A SESSION

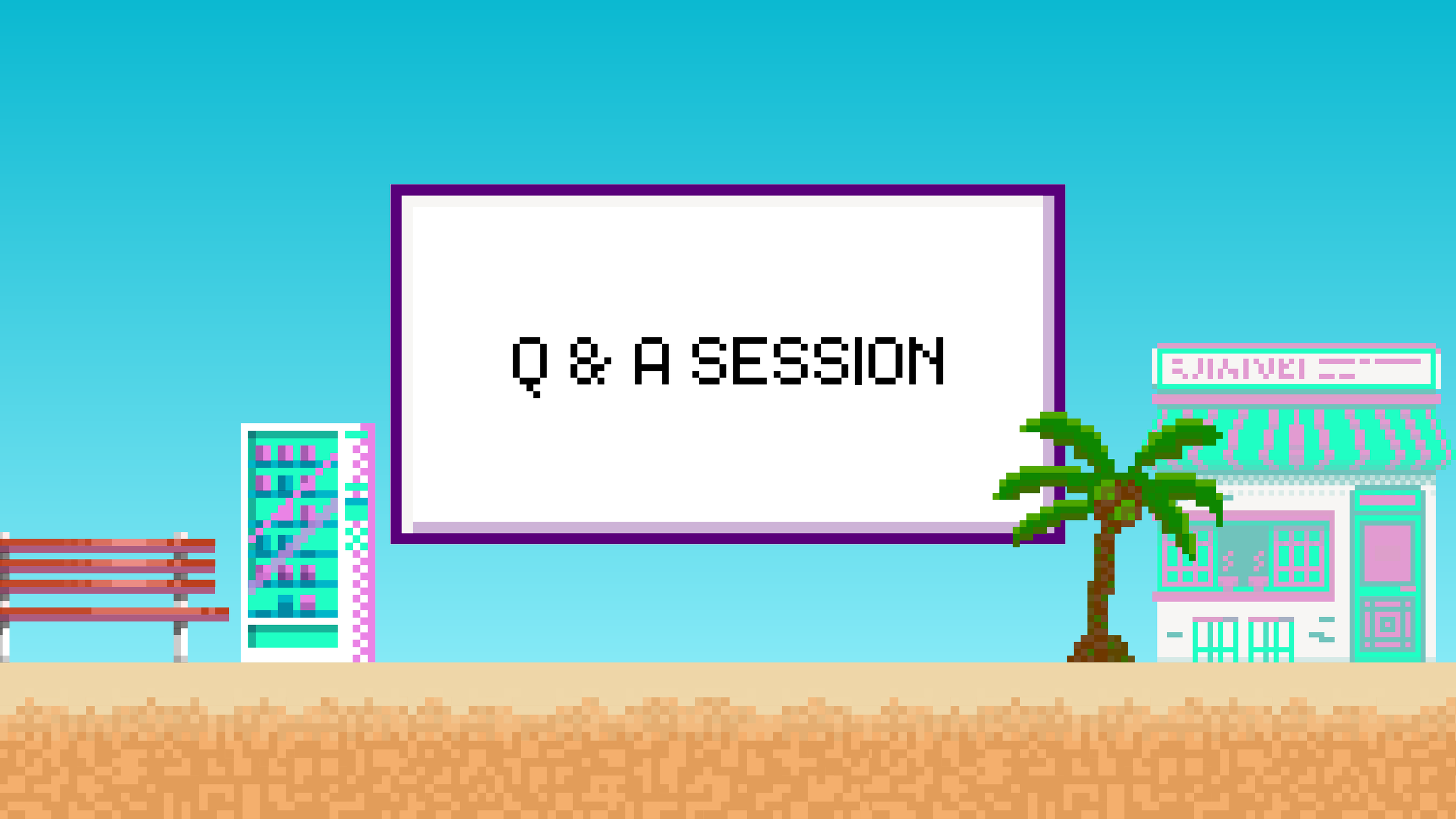

DON'T FORGET TO VOTE ON US!
MECHA-MECHY

THANK YOU!

